17

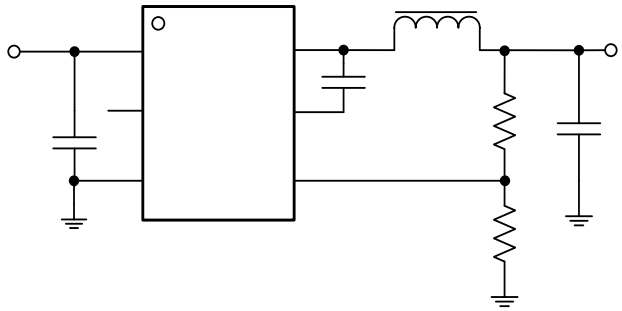

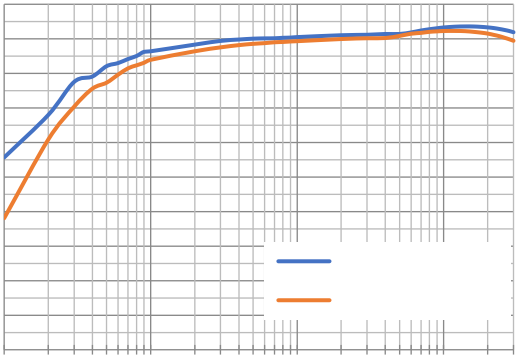

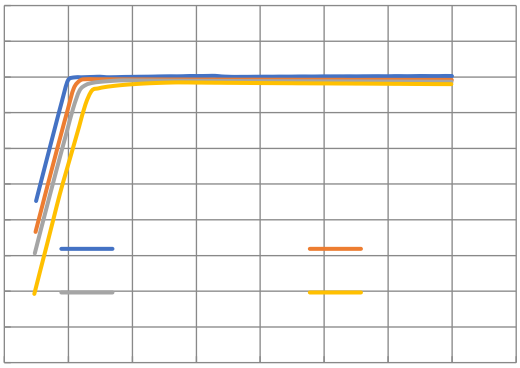

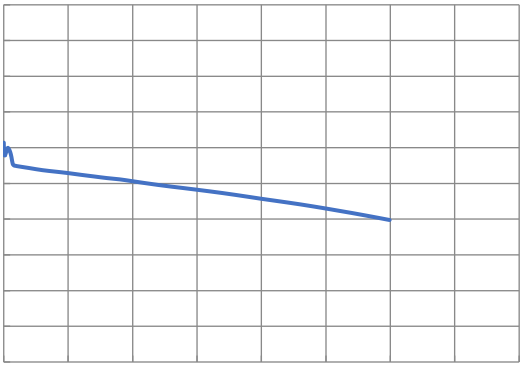

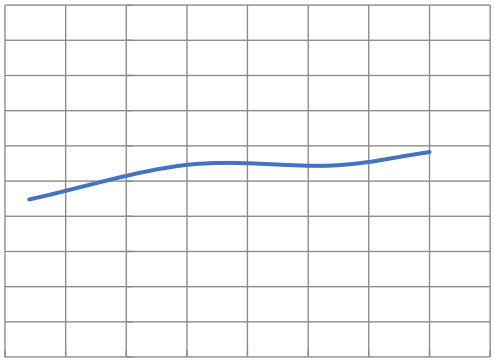

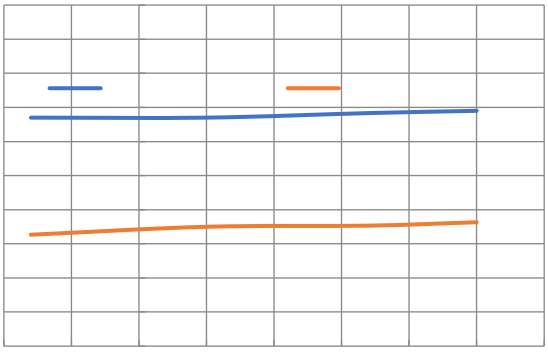

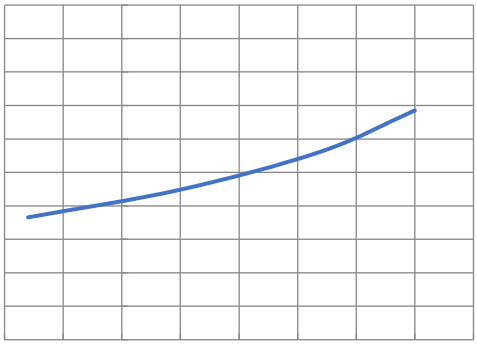

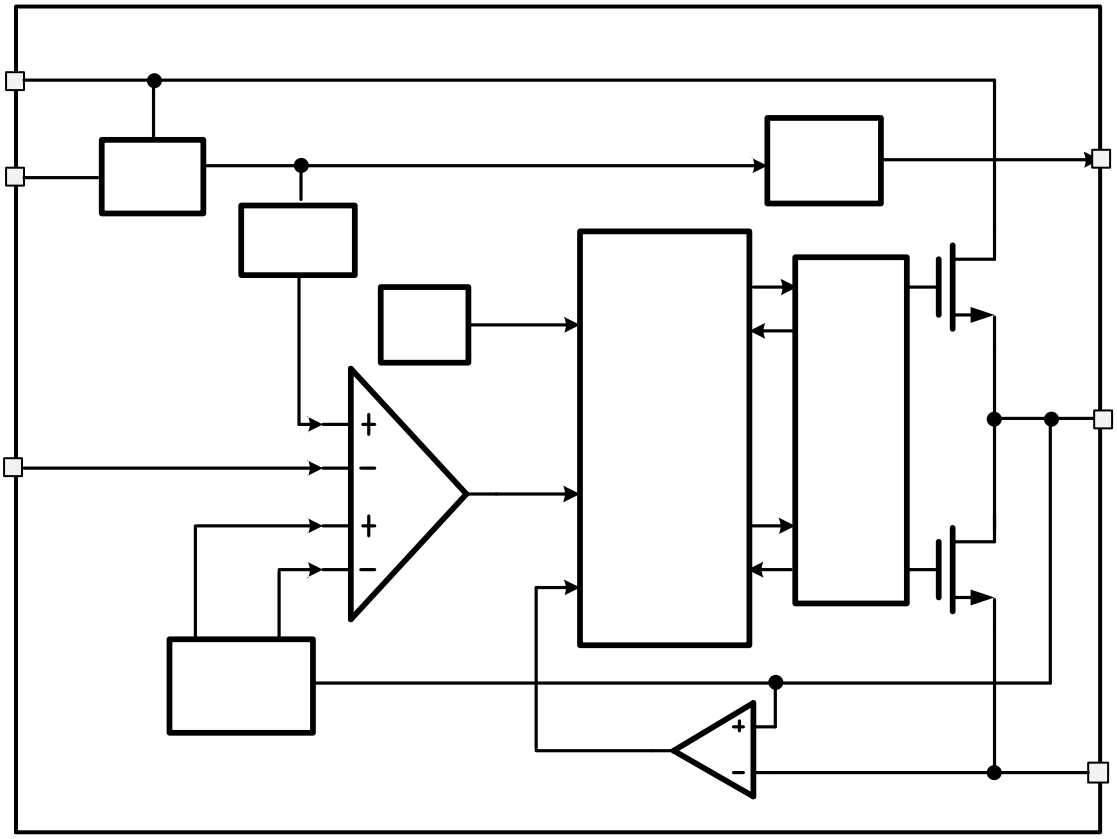

$$\frac{\quad}{f_S}$$

Where:

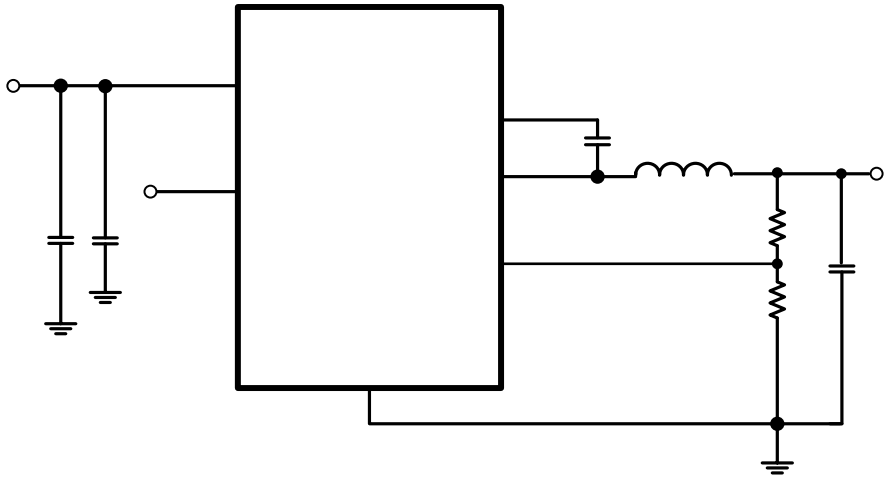

$$\Delta \quad = \frac{\quad}{\times} \times \frac{V_{OUT}}{V_{IN}} \times \left(1 - \frac{\quad}{\quad}\right)$$

$$= \frac{\times (\quad - \quad)}{\times \quad \times \quad \times}$$

$$= \quad + \quad \times \frac{}{2}$$

$$_{1} = \frac{(\quad - \quad) \times \quad _{2}}{}$$

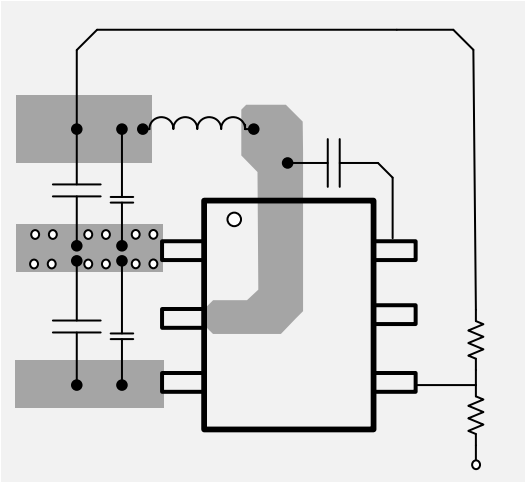

$$(\quad) = \frac{125 -}{\theta JA}$$

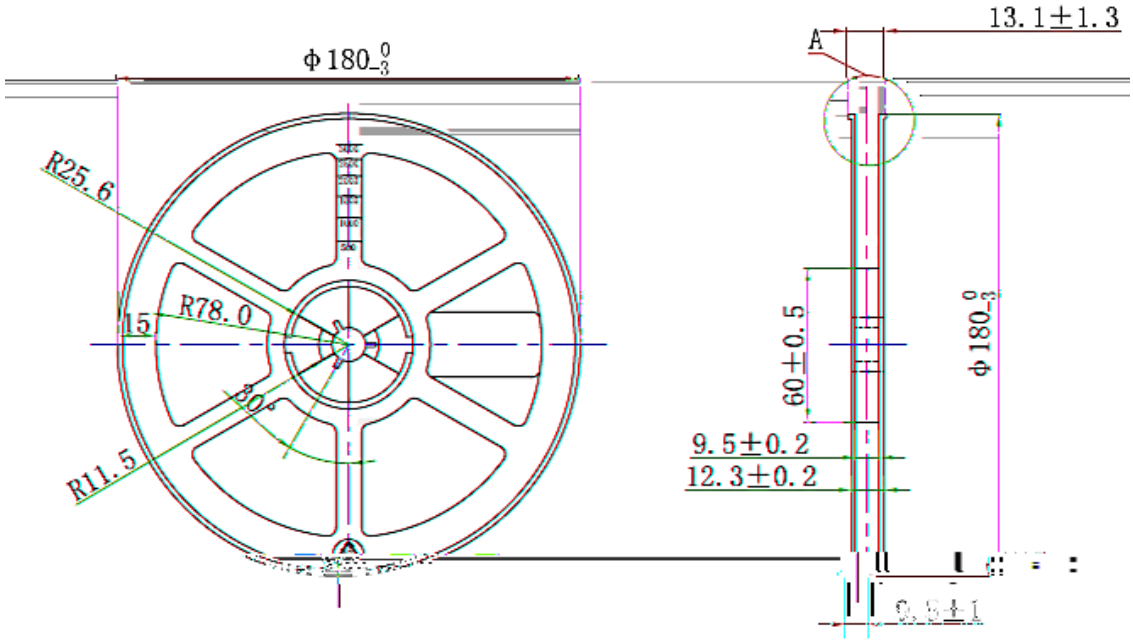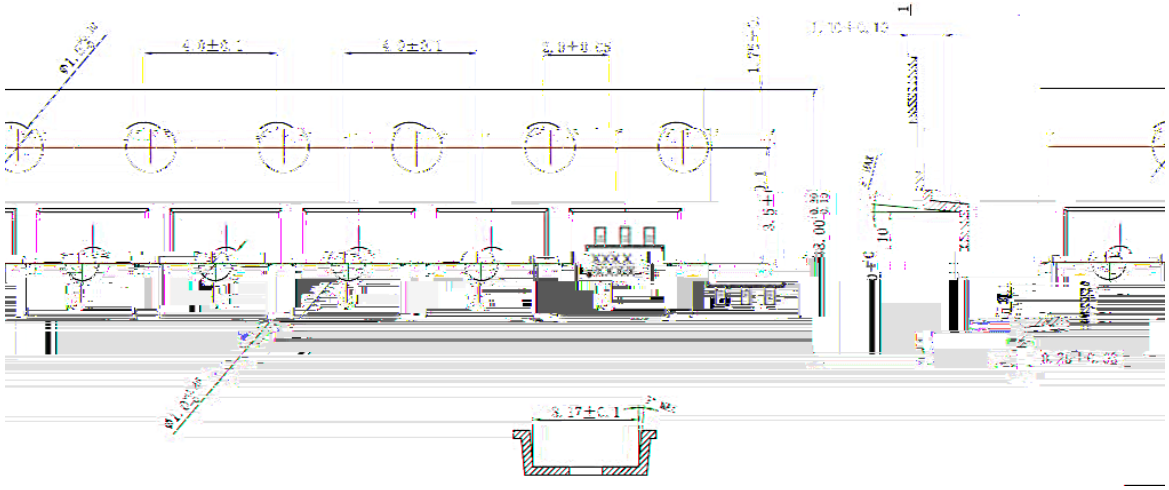
13.1±1.3
A
Φ180
R25.6
R78.0
15
30°
R11.5
60±0.5
Φ180
9.5±0.2
12.3±0.2