17

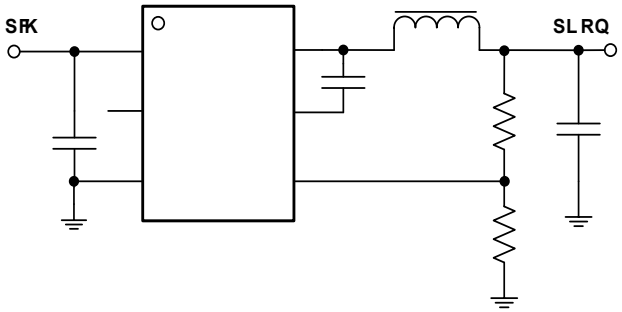

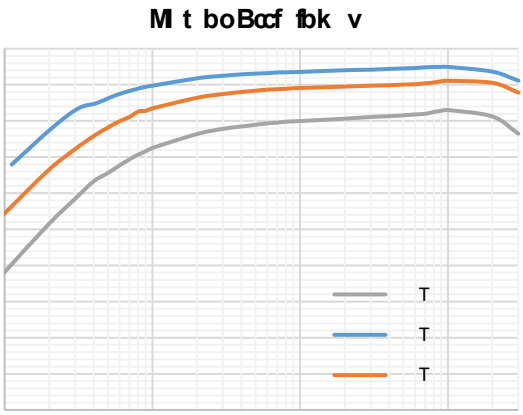

L OABO I B M H DfKD PQ KA OA
ABSF B QVMB M H NQV

K B	KL	MFK CRK QFL K

M O BQBO	ABCFKFQFL K	FK	U	RKFQ

M O BQBO	ABCFKFQFL K	FK	U	RKFQ

M O BQBO	QEBO I BQOF	QPL Q/ 0 3I	PL Q230	RKFQ

PV LI	M O BQBO	QBPQ LKARQFLK	FK QVM U	RKFQ
Mt boPrmmiv ka Lrqmrq				
Bk ib)Pl oqPq oq ka T l chfkd l abp				
Mt bo LPCBQp				
Cbba h ka Bod o mifcfbo				
r odbkql f fq				
Pt fq efkd Cdbnrbk v				
Pl oqPq oqQf b				
Md qb qfl k				

Cfdr d l

Cfdr db

2 Cbba h Sl iq db sp

Cfdr db 3 N r

kqsp Qb mbo qr db

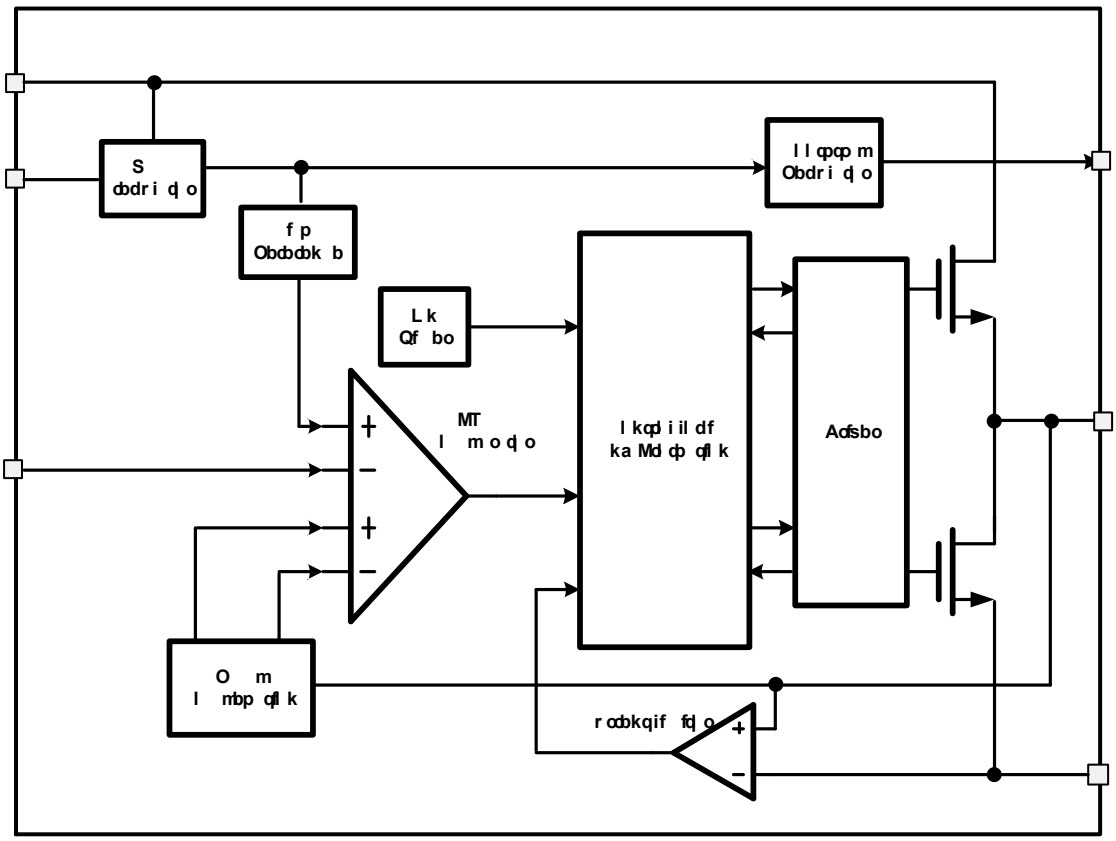
S
dodri q o
f p
Obdodok b
L k
Qf bo
MT
l m o q o
l kqd i il df
ka Md dp qfl k
Aofsbo
l l qpqp m
Obdri q o
O m
l mbp qfl k
r odokqif fq o

RkaboSl iq db l l hl r qRSl L

Bk ib ka Pq oqr m

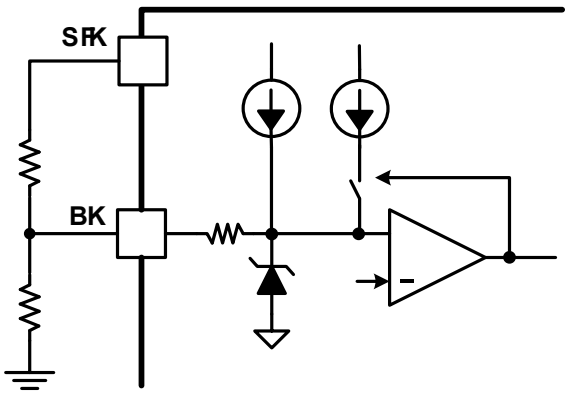

$$3 = \frac{(\text{——}) -}{{}_1(1 - \text{——}) + {}_2}$$

$$4 = \frac{{}_3 \times}{- \quad + {}_3({}_1 + {}_2)}$$

Lsbo rodokqMdqp qflk L M& ka Ef rm lab

llqpqp mSliq db Obdri q o

Qebo i Perqaltk

°

°

Qvmf i mmif qfl k

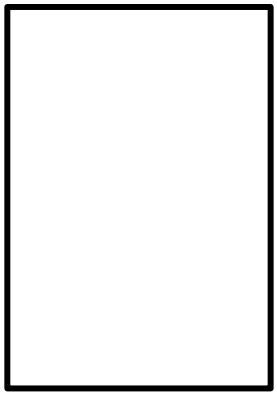

Cfdr db 5 . / S Fkmrq)0 0S,0 L rqmrq

Abpfdk M o bdpqp

Abpfdk M o bdpqp	Bu mib S ir b

Fkmrq m fdj oPbib qfl k

$$\Delta = \frac{}{\times} \times \frac{V_{OUT}}{V_{IN}} \times (1 - \frac{}{})$$

Fkar q| oPbib qfl k

$$= \frac{\times (\quad - \quad)}{\times \quad \times \quad \times}$$

$$= \quad + \quad \times \frac{}{2}$$

Q ib. Ob l bkaba Fkar q| qp

M oqKr bo	l rE&	A O u &	P qr o qfl k r odbkqEb q O qfkd r odbkq &	Pfwb u l uT uE &	Sbkal o

L r qmr q Cbba h Obpfpq o Afsfabo Pbib qfl k

(–) × 2

[redacted]

l vl r qDr fabifkb

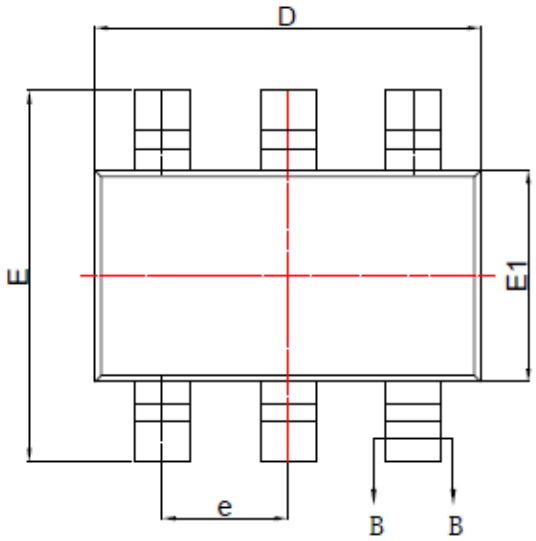

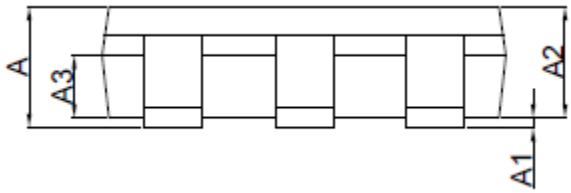

KL QB7

PV L I	Rkfq7 fiif bdpo		
	FK	QVM	U

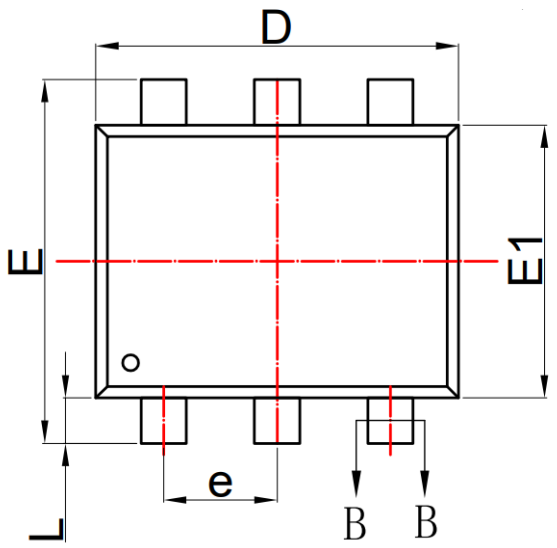

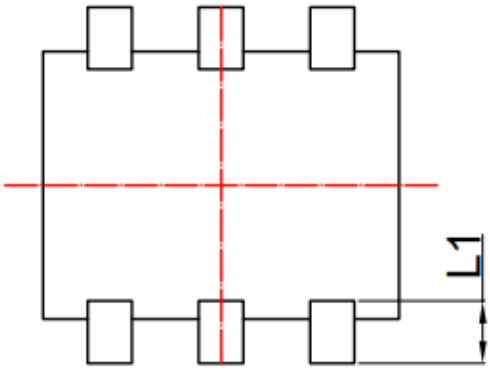

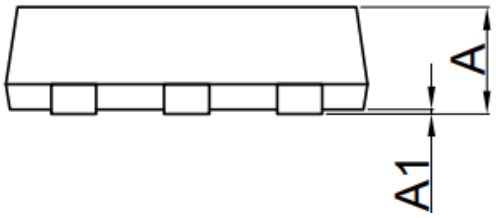

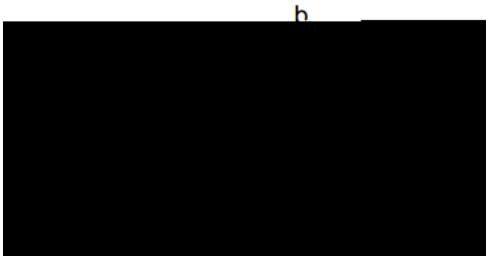

KL QB7

PV L I	Rkfq7 fiif bdpo		
	FK	QVM	U

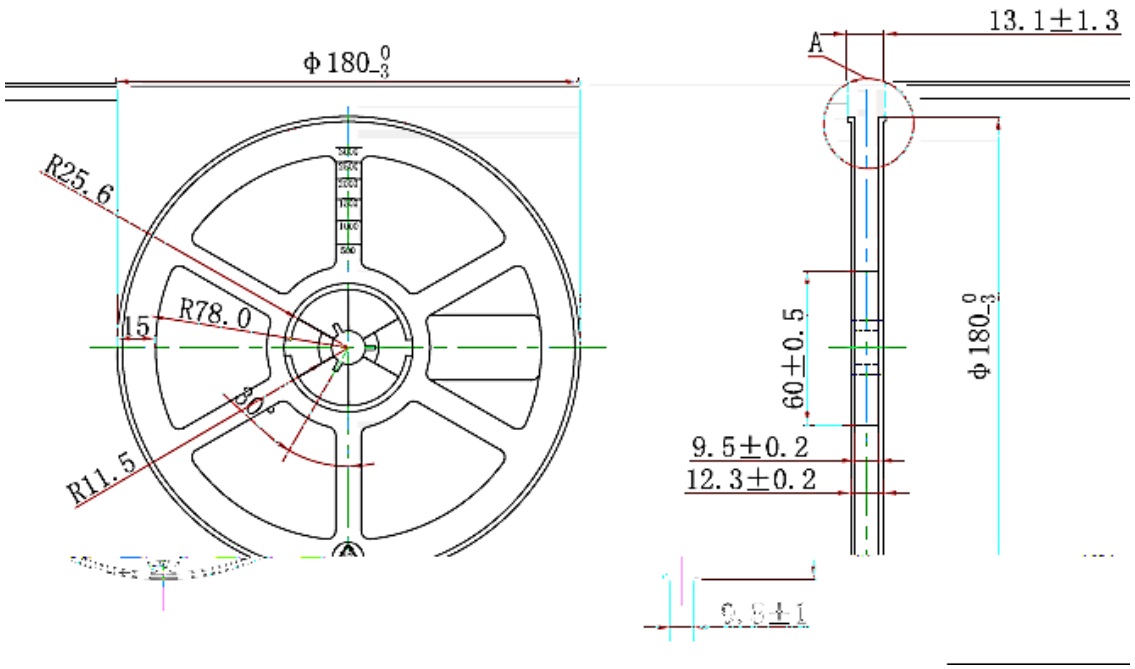

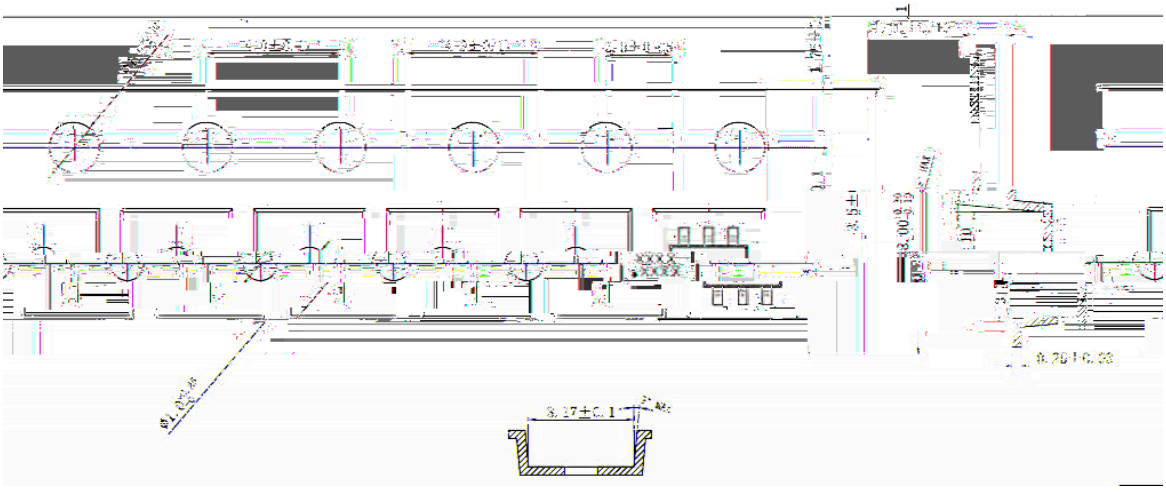

Cbbafkd Afdb qfl k

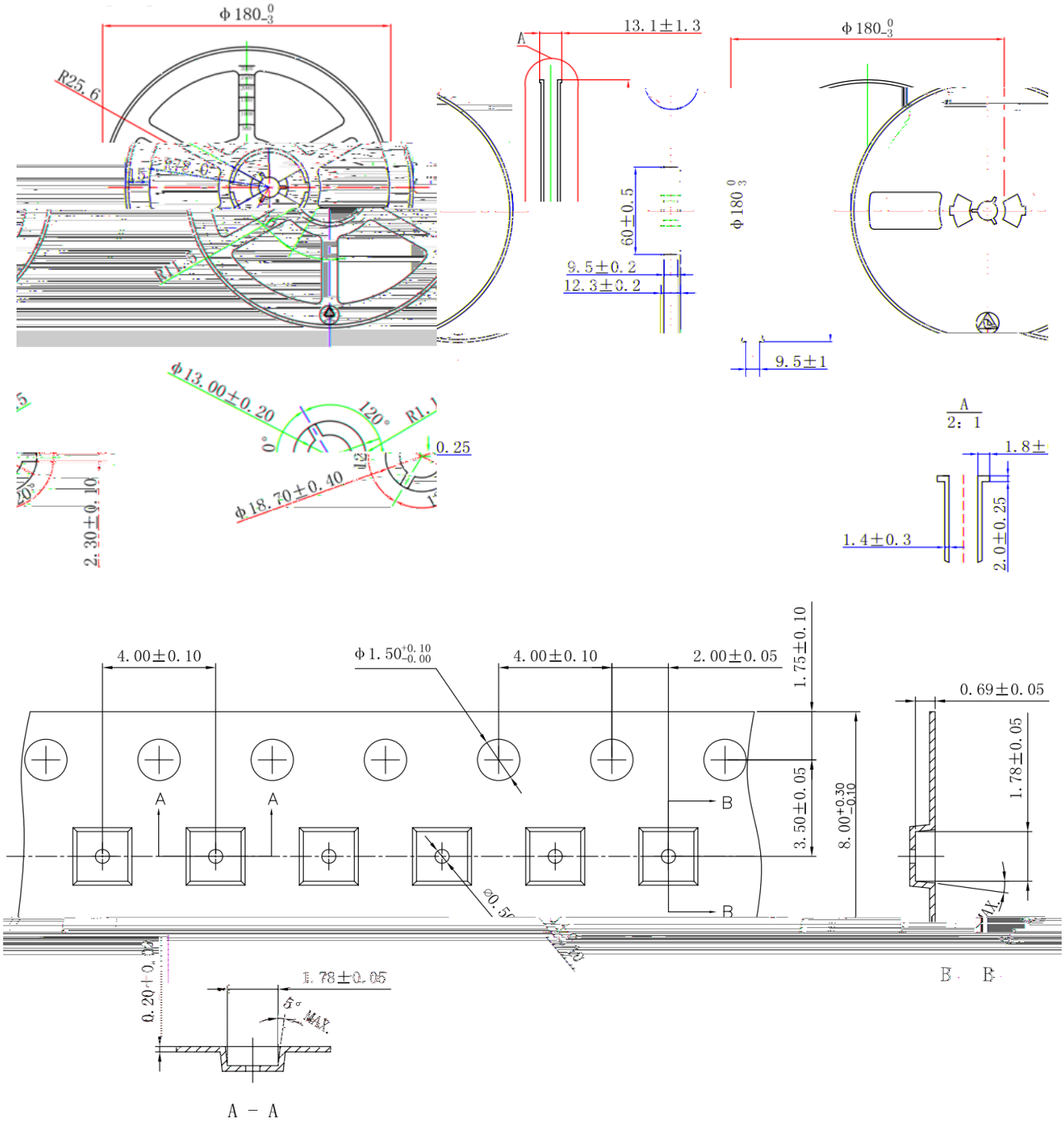

Cbbafkd Afdb qfl k