## K O L HG LMHKR

### O HK K G HKF M HG

| | | | | | |
|---|---|---|---|---|---|
| | | | | | |
| | | | | | |

LHENM F F NF K M G L I G HG NK M HG

Over operating free-air temperature unless otherwise noted [1]

| | | |
|---|---|---|
| | | |
| | | |

## K HF F G HI K M G HG M HGL

| | | | | |
|---|---|---|---|---|
| | | | | |
| | | | | |
| | | | | |

## L K M G L

| | | | | |
|---|---|---|---|---|
| | | | | |
| | | | | |
| | | | | |

(1)
(2)

## M KF E G HKF M HG

| | | | |
|---|---|---|---|
| | | | |
| | | | |
| | | | |

## E MK E K M K LM L

| | | | | |
|---|---|---|---|---|
| | | | | |
| | | | | |
| | | | | |
| | | | | |
| | | | | |
| | | | | |
| | | | | |
| | | | | |
| | | | | |
| | | | | |
| | | | | |
| | | | | |

| | | | | |
|---|---|---|---|---|
| | | | | |
| | | | | |
| | | | | |
| | | | | |
| | | | | |
| | | | | |
| | | | | |
| | | | | |
| | | | | |
| | | | | |
| | | | | |
| | | | | |
| | | | | |
| | | | | |
| | | | | |

## MRI E K M K LM L

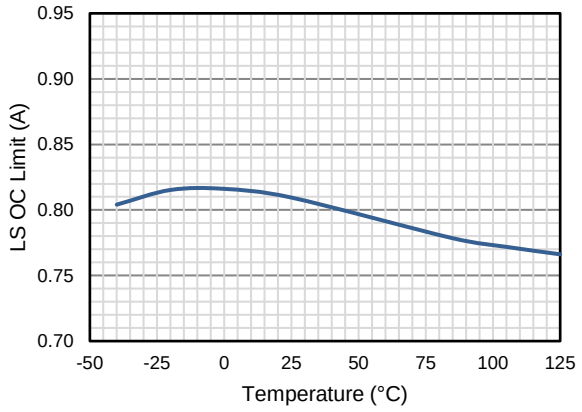
0.95
0.90
0.85
0.80
0.75
0.70
LS OC Limit (A)
-50
-25
0
25
50
75
100
125
Temperature (°C)

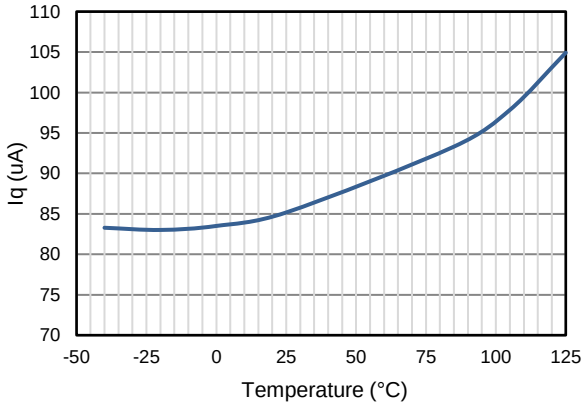
110
105
100
95
90
85
80
75
70
Iq (uA)
-50
-25
0
25
50
75
100
125
Temperature (°C)

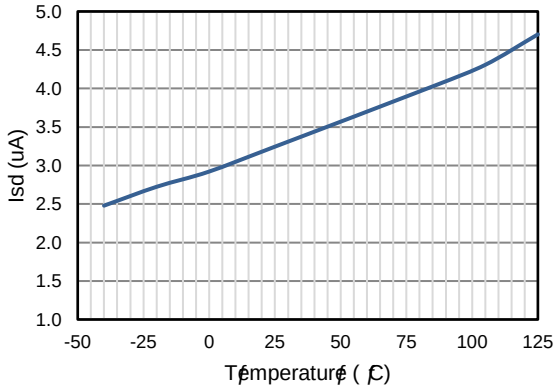
5.0
4.5
4.0
3.5
3.0
2.5
2.0
1.5
1.0
Isd (uA)
-50
-25
0
25
50
75
100
125
Temperature (°C)

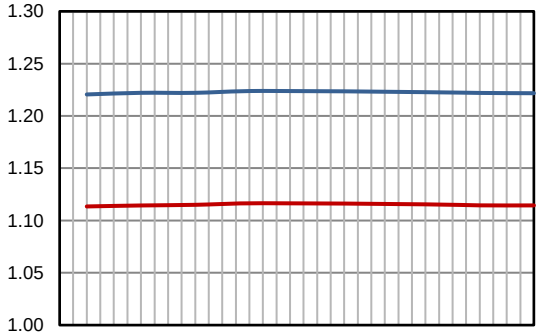
1.30
1.25
1.20
1.15
1.10
1.05
1.00

## NG MHG E EH D K F

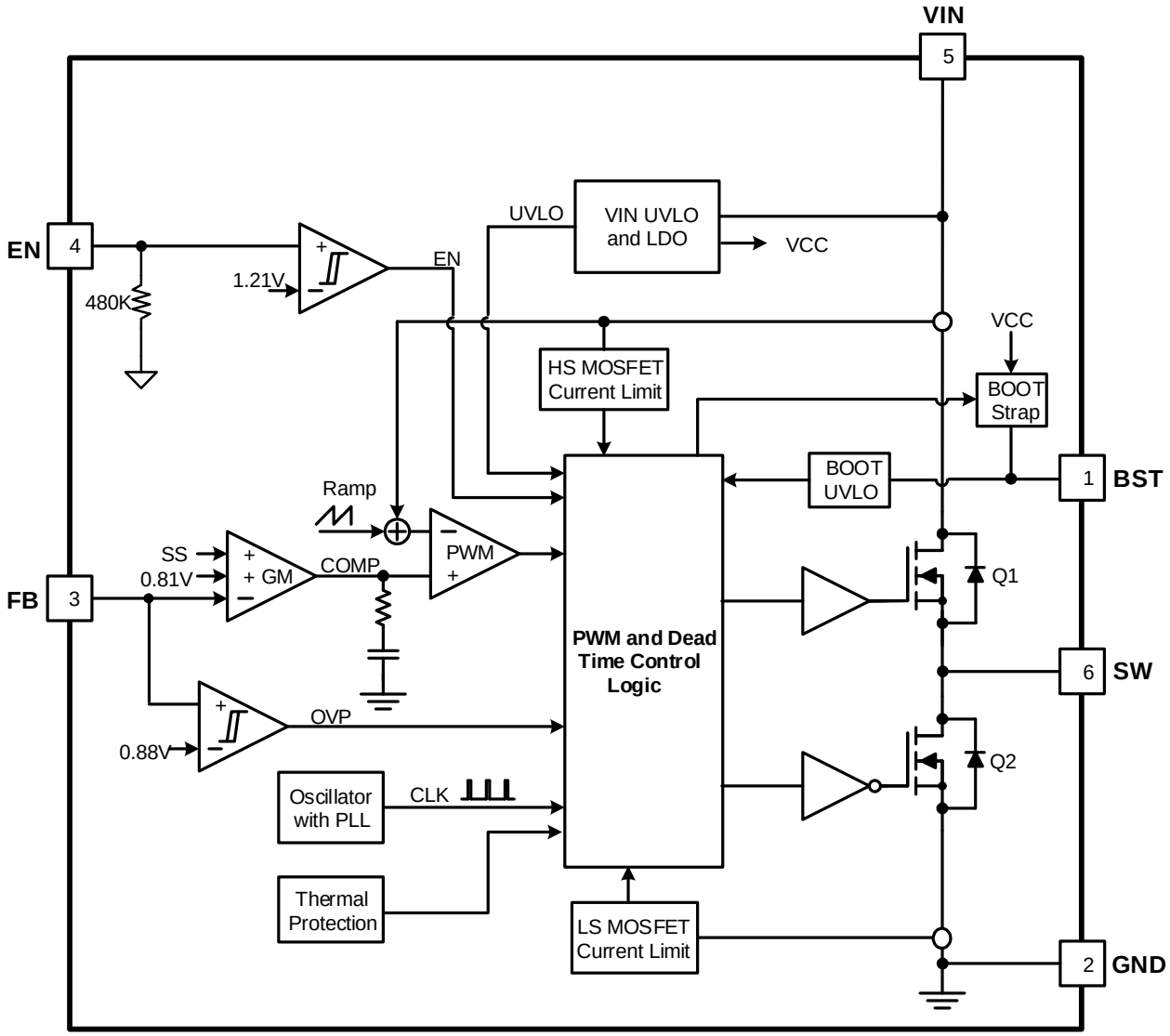

**HI K M HG**

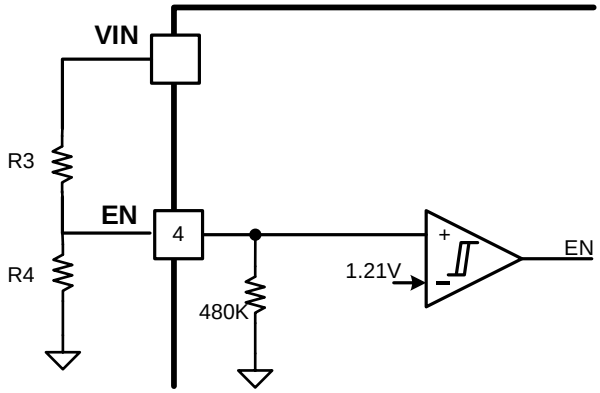


(1)

(2)

## I I E  M HG  G  HKF  M HG

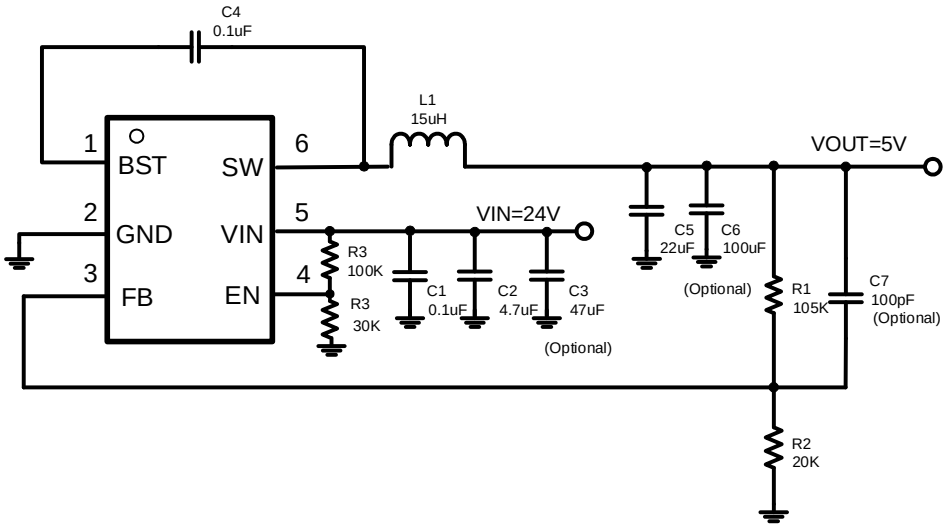


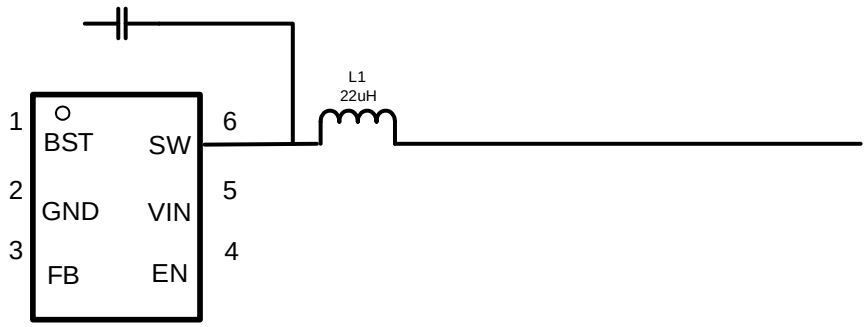


| Design Parameters | Example Value |
|---|---|
| Input Voltage | 24V |
| Output Current | 0.6A |
| Switching Frequency | 2MHz |
| Start Input Voltage (rising VIN) | 5.5V |
| Stop Input Voltage (falling VIN) | 5V |

1.

2.

3.

4.

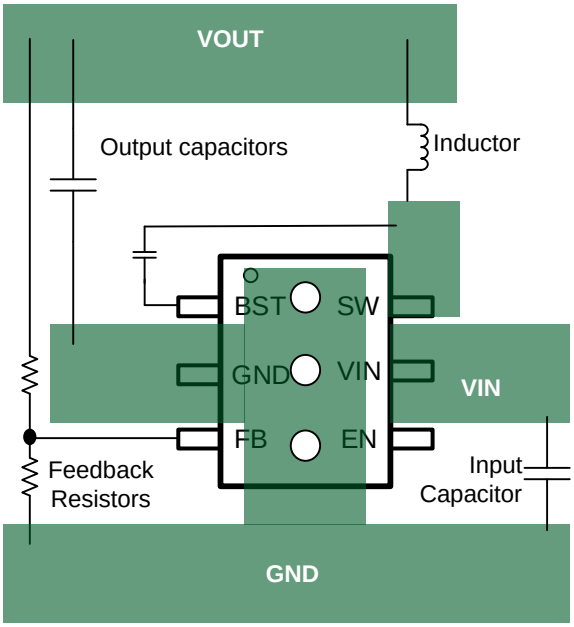
VOUT
Output capacitors
Inductor
BST
SW
GND
VIN
VIN
FB
EN
Feedback
Resistors
Input
Capacitor
GND

# I D G HKF M HG

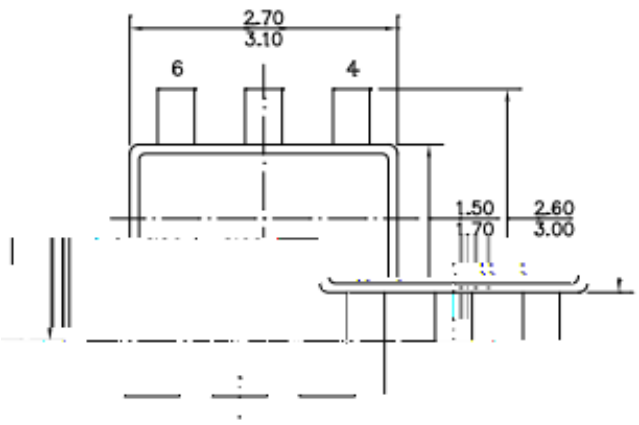


**RECOMMENDED LAND PATTERN**

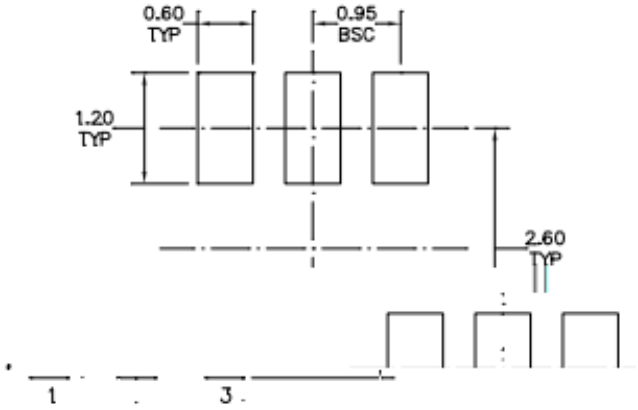


**TOP VIEW**

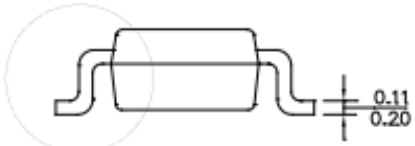


**SIDE VIEW**

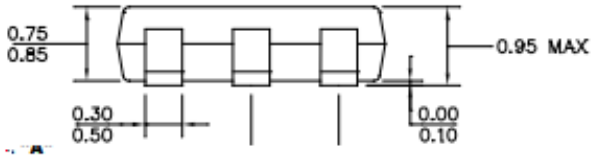


**FRONT VIEW**

**NOTE:**

1) ALL DIMENSIONS ARE IN MILLIMETERS.
2) PACKAGE LENGTH DOES NOT INCLUDE MOLD FLASH, PROTRUSION OR GATE BURR.
3) PACKAGE WIDTH DOES NOT INCLUDE INTERLEAD FLASH OR PROTRUSION.
4) LEAD COPLANARITY (BOTTOM OF LEADS AFTER FORMING) SHALL BE 0.10 MILLIMETERS MAX.
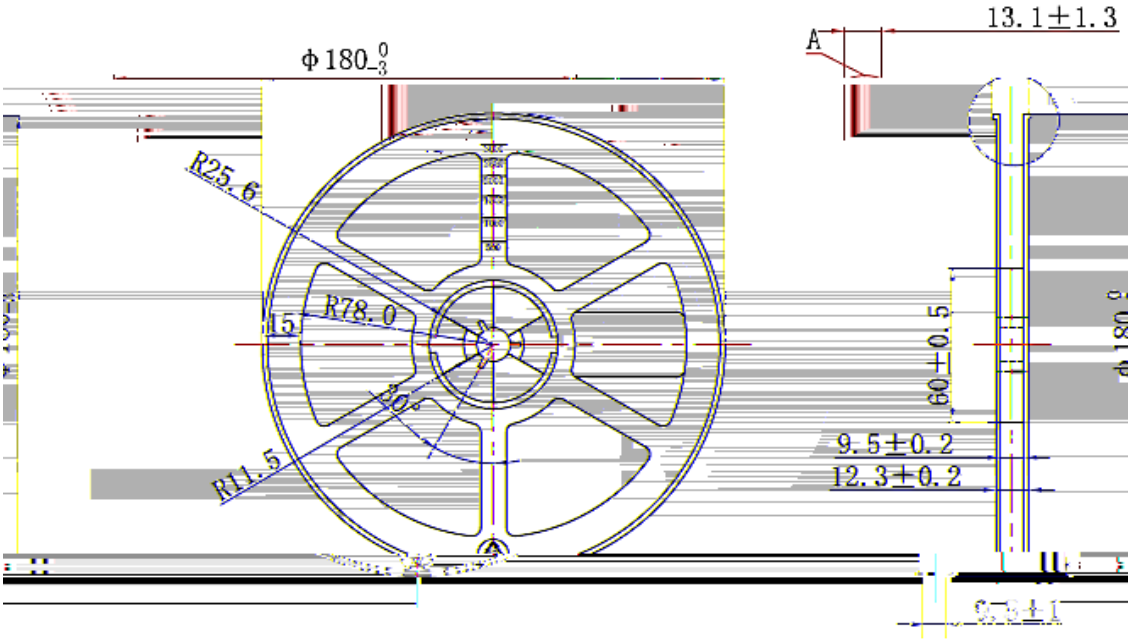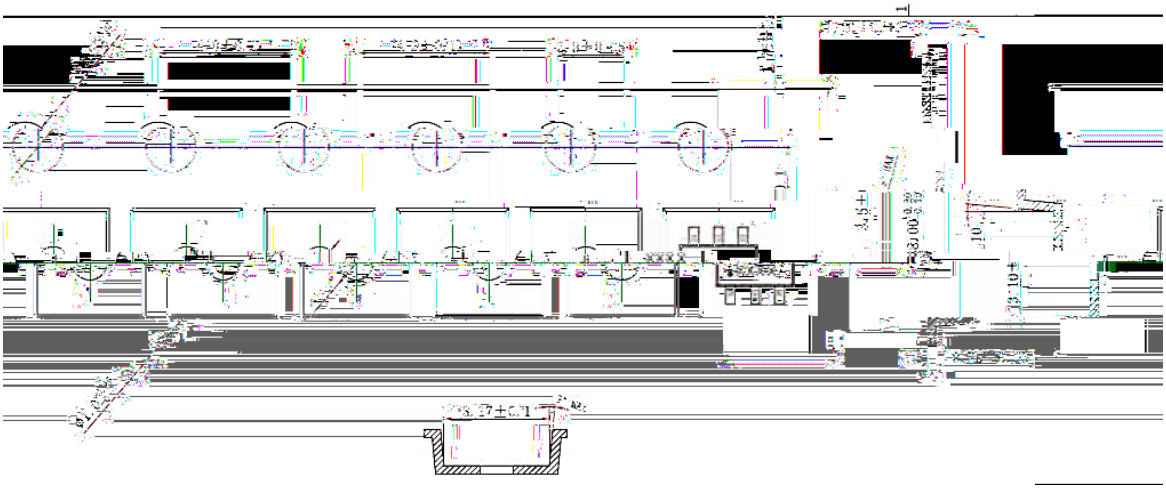
**M I G K E G HKF MHG**