5.5V-100V Vin, 1.8A Peak Current Limit, High Efficiency Asynchronous Step-down DCDC Converter

MNK L

x F XST 8 _dc AP VT) □E

K OBLBHG ABLMHKR

= C4) PVT d QTab U a_aTeXdb aTeXbX b Ph SXUTaUa _PVT d QTab X cVWT RdaaT ceTabX □

ATeXbX □) AT TPbT c PaZTc□

ATeXbX □) D_SPcT 0 1 B DC4 < 0 G8< D< A0C8=6 B U a1 BC BF 4= 51 □

ATeXbX □) D_SPcT CPQT ! □

ATeXbX □) D_SPcT 02: 0 6 4 8=5 A< 0C8 = □

ATeXbX □) D_SPcT 3 4E 8 2 4 A3 4 A 8=5 A< 0C8 = □

ATeXbX □) D_SPcT cVWT 0 1 B eP dTb U4= PSS cTbcXV XbT b P S aT PcTS STbRaX_cX b U aXcTa P I T TaSXSTb□

□ OB HK□ K BG HKF MBHG

B2C! 0 ! BC4 A	CP_T ATT		! 0 !		4B

LHENM F BF NF K MBG L

eTa _TaPcXVUaTT PXbcT _TaPcdaT d Tbb cVWTaf XbT cTS

E 8=	□"		E
1 BC	□"		E
BF			E
1 BC BF	□"	□	E
4= !	□"	%□	E
51	□"	□	E
_TaPcXVYd RcX cT _TaPcdaT C9 "			2
Bc aPVT cT _TaPcdaT CBC6	%		2

I BG HG B NK MBHG

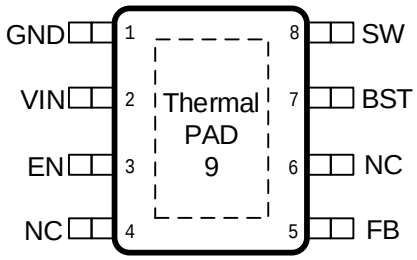

(1) BcaTbbTb QTh SdWbT XbcTS d STa0 Qb dcT < PgX d APcXV Ph RPdbT STeXRT _Ta P T cSP PVT□CWT STeXRT Xb cVdPaP cTTS c Ud RcX dcbXST UXb ATR T STS _TaPcX 2 SXbX b□

(2) CWb _PaP TcTaXb P dWT aTcXRP STbXV eP dT P SP I T TaSXSTXb XbdP TS XbXST dWT _X U a_a cTRcX □

(3) CWT 82 XRdSTb eTacT _TaPcdaT _a cTRcX c _a cTRcdWT STeXRT SdaXV eTa PS R SXbX b□9d RcX cT _TaPcdaT f X TgRTTS 2 f WT eTacT _TaPcdaT _a cTRcX Xb PRcbT□2 cXd db _TaPcX PQ eT dWT b_TRXbTS PgX d _TaPcXVYd RcX cT _TaPcdaT f X aTSdRT XbTcX T□

I BG NG MBHGL

6 = 3		6 a d S
E 8=	!	8 _dcbd__h e dPVT□2 TRcP RP Qh_Pbb RP_PRXb aUa E 8= _X c 6 = 3 _X□ PdW Ua E 8= _X c WXWUaT dT Rh Qh_Pbb RP_PRXb aP S 6 = 3 dbcQT Pb bW acPb _ bbXQT□
4=	"	4 PQT _X c dWT aTVd Pc a f XbWXcTa P _d d_ RdaaT c b daRT□ d QT f □ E c SXbPQT dWT R eTacTa□5 PcXV c T PQT dWT R eTacTa□
= 2		= c 2 TRcX □
51		8 eTacXV X_dc UdWT R _PaPc a□CWT dP_ UTgcTa P UTTSQPRZ aTb Xbc aSXbXbSTaUa dWT dc_dcc 6 = 3 bTdb dWT dc_dce dPVT□CWT STeXRT aTVd PcTb 51 e dPVT c dWT XcTa P aTUTaT RT eP dT U □E dh_XRP □
= 2	%	= c 2 TRcX □

1BC	&	f Tabd__h QRb U aWXVWbXST _ f Ta< B54C VPcT SaXTa□2 TRcP □d5 RP_PRX a Ua 1 C_X c BF _X□1 dbcaP_RP_PRX aXRVPaVTS f WT BF e dPVT X f □
BF		ATVd Pc abf XRVXV dc_dc□2 TRcBF c P TgcTa P _ f Ta XSdRc a

CVTa P PS

E MKB E A K M KBLMB L

E8=, E C9, 2m ! 2 dn_XRP ePdT Xb cTbcTS d STa! 2□

E8=	_TaPcXV X_dce dPVT		□	E
EDE	E8= DE CWaTbW S	E8= aXbXV 7hbcTaTbXb	□ □ !	E E
8873=	BWdcS f RdaaT cUa E8= _X	4=, PS CY, 2m ! 2	□"	d0 d0
8	dXTbRT cRdaaT cUa E8= _X	4= U PcXV PS bf XRWXV 1 C BF , E CY, 2m ! 2	" (% !	d0 d0
8	0RcXeT RdaaT cUa E8= _X	4= U PcXV PS E DC, ! E	%	d0
A3B =N7	7XWbXST < B54C aTbXbdP RT	E1 c EBF , E	% (& &	
EA45	ATUTaT RT e dPVT U51	CY, ! 2	□ & □! □!"	E

MRI B E A K M KBLMB L

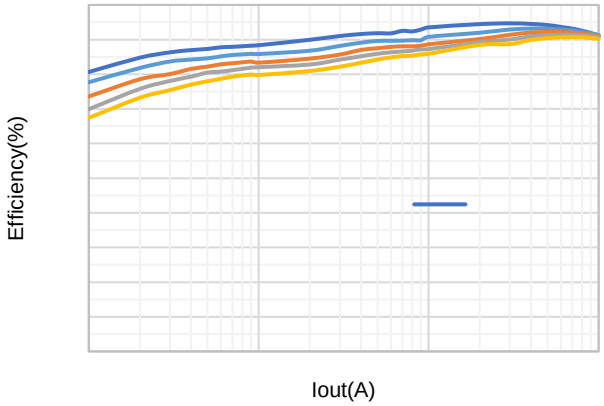

5XVdaT ! □4UURXT Rh eb PS 2 dæaT c E dc; ! E

5XVdaT " □4UURXT Rh eb PS 2 dæaT c E dc; E

5XVdaT □ PS ATVd PcX EX, E E dc; ! E

5XVdaT □ PS ATVd PcX EX,! E E dc; E

5XVdaT %□ XT ATVd PcX 8 dc; 0

5XVdaT &□Bf XRWXV 5aT dT Rh eb EX E dc; ! E

NG MHG E EH D B K F

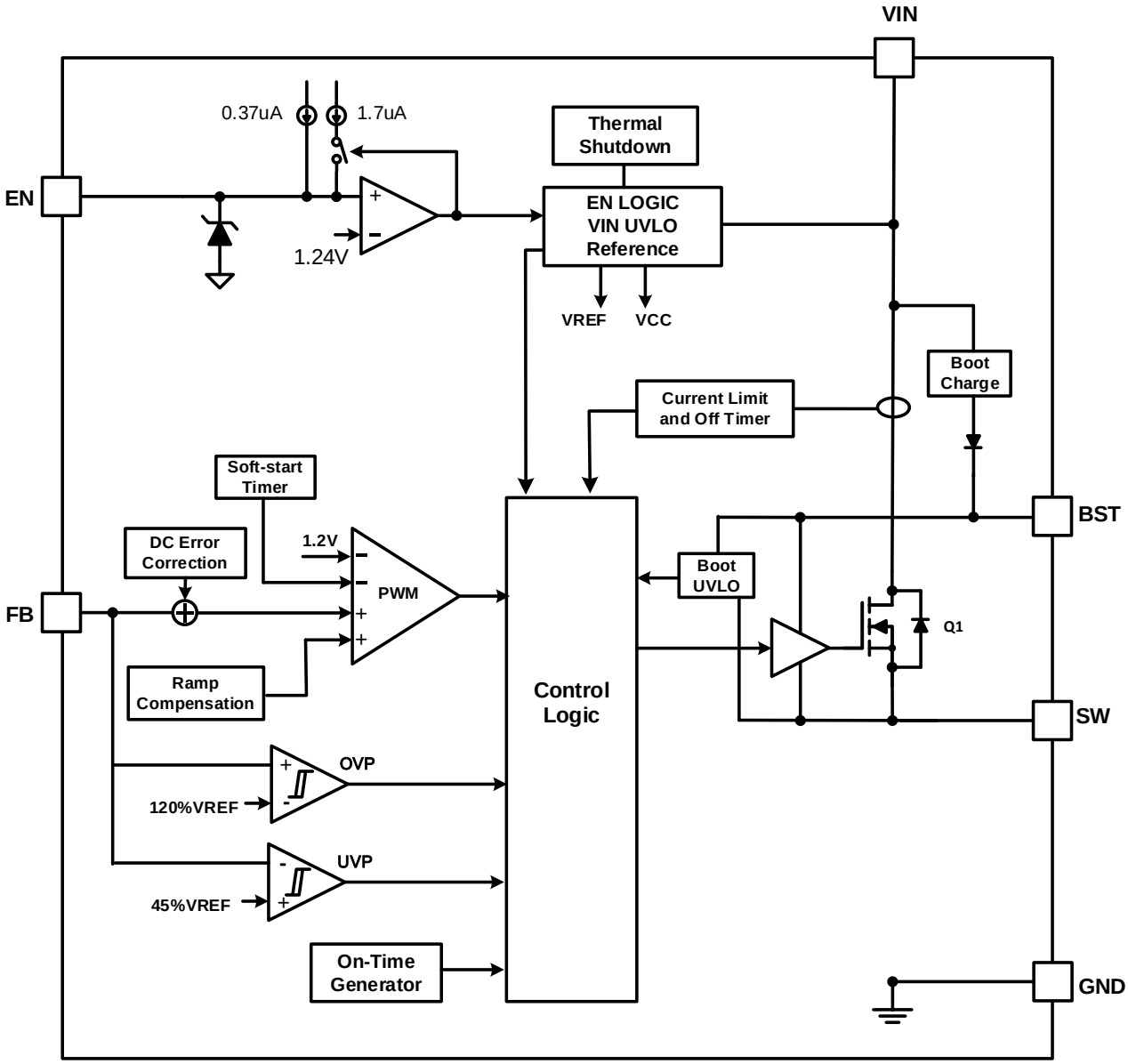

5XdaT 5d RcX P 1 RZ3XPVaP

HI K MBHG

CWT B2C! 0 ! XbP □E E X_dc □0 _TPZRdaaT c X Xcf WT E8=+% E BcT_S f 3232 R eTacTaf XcWQdXc X (& WXWbXST _ f Ta< B54C□8cX _T T dbR bdP c cX T R ca c aTVdPcT dc_dce dPVT _a eXSXV TgRT T c XTP S PScaP bXT caTb_ bT P S XcTa P Taa aP _XTaXcTVaPcTS X _a eT cWT XTP S PSaTVdPcX □

SdaXV B2C! 0 ! UTPcdaTb P XcTa P "□ b b UcbdPaccX T c Pe XS PaVT XadbWRdaaT cP S dc_dce dPVT eTabW c SdaXV bdPacd_□CWT bf XRWXV UaT dT Rh XbUgTS Pc"(: 7i □CWT STeXRT P b bd__ ab _a eXSXWR bdPacd_f XcW_aT QXRbTS dc_dcR SXcX □

fCWTWBd2C! 0 ! WPb P STUPd c X_dc bdPacd_e dPVT U IE<f XcWI D V ab D G H I

CWT B2C! 0 ! aTVd PcTb dWT XcTa P aTUTaT RT e dPVT Pc □E□CWT dc_dce dPVT Xs bTcQh P aTbXsc aSXsXSTaUa dWT dc_dc STc dWT 51 _X□&cXs aTR T STSc dbT c TaP RT aQTccTaaTbXsc ab□DbT 4 dPcX " c RP Rd PcT aTbXscP RT UaTbXsc aSXsXSTab□C X _a eT TUURXT Rh Pc XWt PSb PaVTaeP dT aTbXsc ab PaT aTR T STS□7 f TeTa XscdWT eP dTb PaT c VWWdWT aTVd Pc af X QT aT bdbRT_cXQT c XsT PUUTRcXV dc_dce dPVT PRRdaPRh□

"

f VTaT

- x A51NC Xs dWT aTbXsc aR TRcXV dWT dc_dcc dWT 51 _X□
- x A51N1 c Xs dWT aTbXsc aR TRcXV dWT 51 _X c dWT Va d S□

CWT B2C! 0 ! XcTVaPcTb P XcTa P b UcbdPac RXaRdXs dWPc aP _b dWT aTUTaT RT e dPVT Ua i Ta e db c □E aTUTaT RT e dPVT X " □ b□&UdWT 4= _X Xs _d TS QT f □"E bf XaRWVKV bc _b P S dWT XcTa P b UcbdPacaTbTdb□ CWT b Uc

RXaRdXbR _PaTb dVT 51 _X e dPVT c dVT XcTa P aTUTaT RT e dPVT□F WT 51 e dPVT TgRTTSb ! UXcTa P □E aTUTaT RT e dPVT dVT WXVWbXST < B54C oda b UWc Pe XS dc_dce dPVT R cXdT c XRaTPbT□F WT dVT 51 _X e dPVT UP b QT f UdVT □E aTUTaT RT e dPVT dVT WXVWbXST < B54C RP oda PVPX□

CVT B2C!0 ! _a cTRdb dVT STeXRT Ua dVT SP PVT SdaXV TgRTbbXST WTPcP S _ f TaSXbX_PcX R SXbX b□ RT dVT Yd RcX cT _TaPodaT TgRTTSb 2 dVT XcTa P dVTa P bT b abc _b _ f Ta< B54Cb bf XRVXV□F WT dVT Yd RcX cT _TaPodaT UP b QT f ! 2 dVT STeXRT aTbdPabf XWXcTa P b UdbdPac_VPbT□

I I EB MBHG BG HKF MBHG

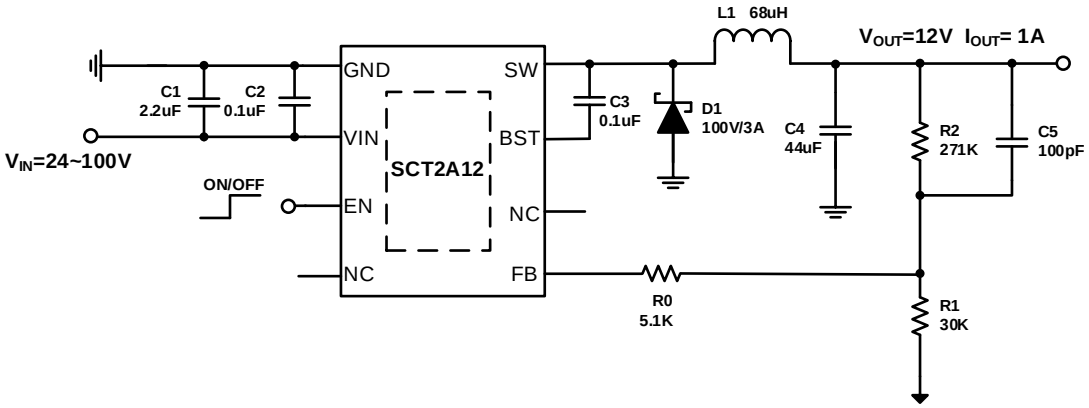

8 _dcE dPVT	E = a P ! E c E
dc_dcE dPVT	! E
< PgX d dc_dc2 daaT c	0
Bf XRWXV 5aT dT Rh	"(: 7i
dc_dce dPVT aX_ T _TPZ c _TPZ	E
CaP bXT cATb_ bT 1 0 c & 0 PS bcT_	E dc, %(E

CWT dc_dce dPVT Xs bTcQh P TgcTa P aTbXsc aSXsXSTa
A P S A X dh_XRP P__XRPcX bRWT PcXR□
ATR T STS A aTbXsdP RT Xs " : □

F WTaT

- x 8 XdcWT XSdRc a_TPZc _TPZRdaaT c
- x XdcWT

5 adVT TgP _T STbXV dVT BB" 1 BRWccZh SXST Xs bT TRcTS U a Xb f TaUaf PaSe dPVT P S V S dVTa P RVPaPRcTaKcKb R _PaTSc b P TaSTeXRTb□CVT dh_XRP Uaf PaSe dPVT UdVT BB" 1 Xs □&e db Pc 0□

CVT SXST dbcPb QT bT TRcTS f XsVP P__a _aRcT _ f TaaPcXV□CVT SXST R SdRb dVT dc_dcRdaaT cSdaXV dVT UUcX T UdVT XcTa P _ f Tabf XsRW□CVT UUcX T UdVT XcTa P bf XsRWXs P Ud RcX UdVT PgX d X_dc e dPVT dVT dc_dce dPVT P S dVT bf XsRWKV UaT dT Rh□CVT dc_dcRdaaT cSdaXV dVT UUcX T Xs d cX_XTS Qh dVT Uaf PaSe dPVT UdVT SXST c RP RdPcT dVT XbdP dP T db R SdRcX bbTb UdVT SXST□0 c WKVWTa bf XsRWKV UaT dT RXTb dVT PR bbTb UdVT SXST TTS c QT dPZT Xc PRR d c□CVT PR bbTb UdVT SXST PaT SdT c dVT RVPaVXV P S SXsRVPaVXV UdVT Yd RcX RP_PRXsP RT P S aTeTabT aTR eTah RVPaVT□4 dPcX ! Xs dbTS c RP RdPcT dVT c dP _ f TaSXsbX_PcX XRdSXV R SdRcX bbTb P S PR bbTb UdVT SXST□

CVT BB" 1 SXST WPb P Yd RcX RP_PRXsP RT U _5□DbXV 4 dPcX ! dVT c dP bb X dVT SXST Pc dVT PgX d X_dce dPVT Xs □F □

&UdVT _ f Tabd__h b_T Sb P bXV XsKRP cP d c UcX T Pc XVWc PS RdaaT db aX b TT_ ST R bXSTa dbXV P SXST f WKRVWPb P f TPZPVT RdaaT cP S b XVWch WKVWTaUaf PaSe dPVT Sa _□

0 □ 5 RTaP XR RP_PRXc a dbc QT R TRcTS QTcf TT 1 C _X P S BF _X U a _a _Ta _TaPcX □0 RTaP XR RP_PRXc af XcWG A aQTccTa VaPST SXT TRcaXR Xb aTR T STS□CWT RP_PRXc abW d S WPeT P E aWXWTae cPVT aPcXV□

CWT bT TRcX U dc_dcRP_PRXc af X PUUTRc dc_dce cPVT aX__T X bcTPSh bcPcT P S PS caP bXT c_TaU a P RT□

CWT dc_dcaX__T Xb TbbT cXR h R _ bTS Ucf _Pacb□ T Xb RPdbTS Qh cWT XSdRc aRdaaT caX__T V XV cWa dVW cWT 4 dXcP T cB TaXTb ATbXcP RT 4B A UcWT dc_dcRP_PRXc ab P S cWT cWTaXb RPdbTS Qh cWT XSdRc aRdaaT caX__T RWPaVXV P S SXbRWPaVXV cWT dc_dcRP_PRXc ab□C PRWXTeT b P dc_dce cPVT aX__T RW bT P f 4B A dc_dc RP_PRXc a XZT RTaP XR RP_PRXc a□5 a RTaP XR RP_PRXc ab cWT RP_PRXcP RT S XPcTb cWT dc_dc aX__T□5 a bX _XbRPcX cWT dc_dce cPVT aX__T RP QT TbcX PcTS Qh 4 dPcX %STbXaTS□

%

F WTaT

- x Xb cWT dc_dce cPVT aX__T
- x UBF Xb cWT bf XcRWXV UaT dT Rh
- x Xb cWT XSdRcP RT UXSdRc a
- x 2 DC Xb cWT dc_dcRP_PRXcP RT
- x E DC Xb cWT dc_dce cPVT
- x E8-Xb cWT X_dce cPVT

3 dT c RP_PRXc ab STVaPSXV d STa 3 2 QXRb cWT QXRb e cPVT RP bXV XbRP ch aTSdRT RP_PRXcP RT□2 TaP XR RP_PRXc ab RP bT bc UcWTXaRP_PRXcP RT Pc aPcTS e cPVT□CWTaTU aT TPeT PaVX cWT e cPVT aPcXV c T bdaT PST dPcT TUUTRcXcT RP_PRXcP RT□Ch_XRP h cf !! 5 RTaP XR dc_dcRP_PRXc ab f aZU a bcP__XRPcX b□

CPQT! Xbcb ch_XRP eP dTb UTgcTa P R _ T cb U ab T bcP SPaS dc_dce cPVTb□

EX, E E dc; !E d Tbb cWTaf XbT cTS

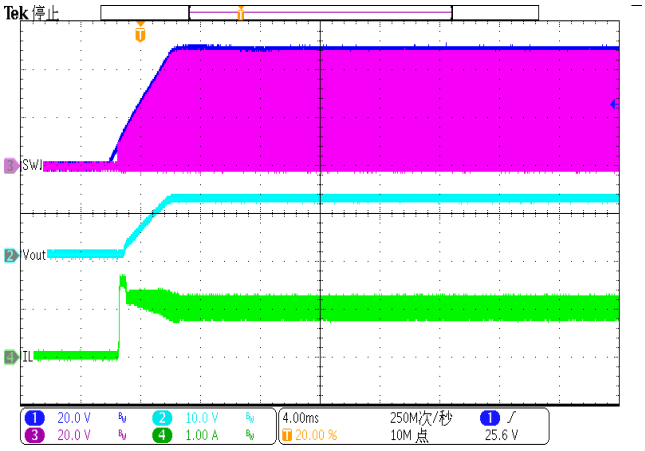

5XdaT ! f Tad_ 8 PS, 0

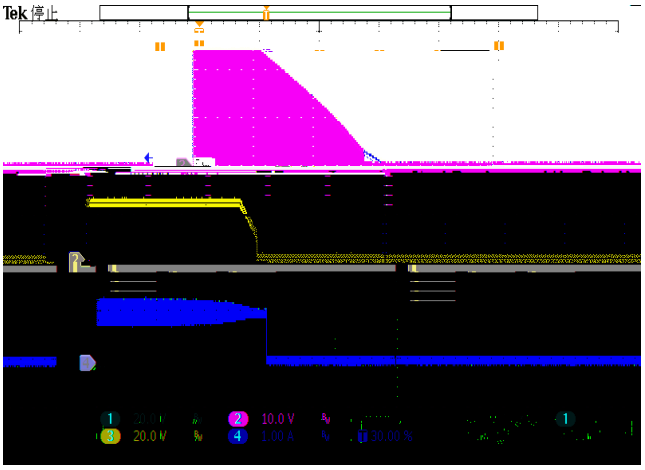

5XdaT " f TaS f 8 PS, 0

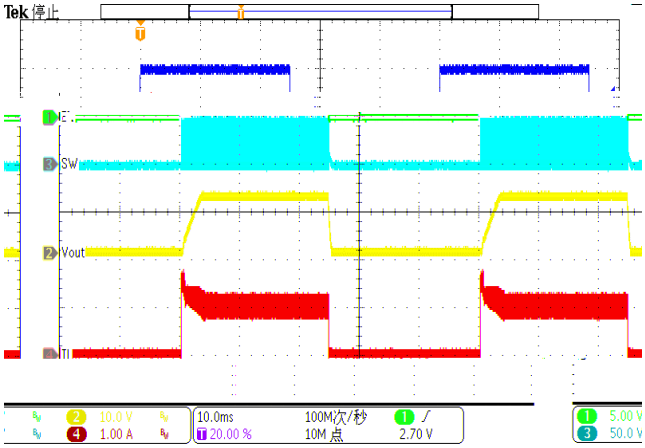

5XdaT 4= c VVT 8 PS, 0

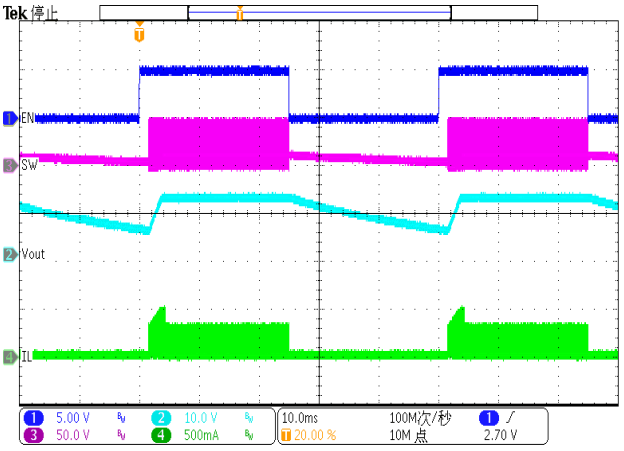

5XdaT . 4= c VVT 8 PS, 0

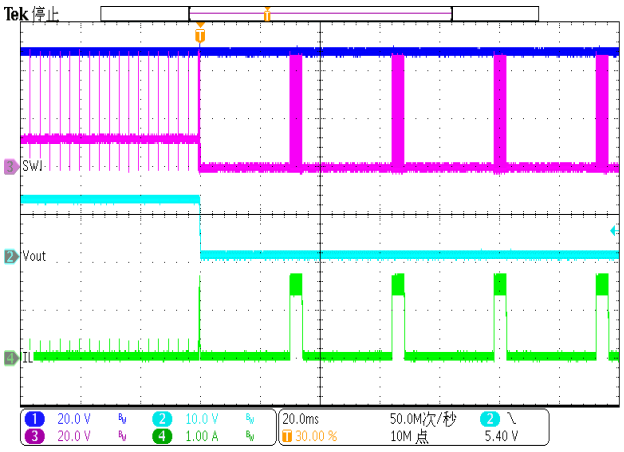

5XdaT %□ eTa2 daaT c a cTRcX

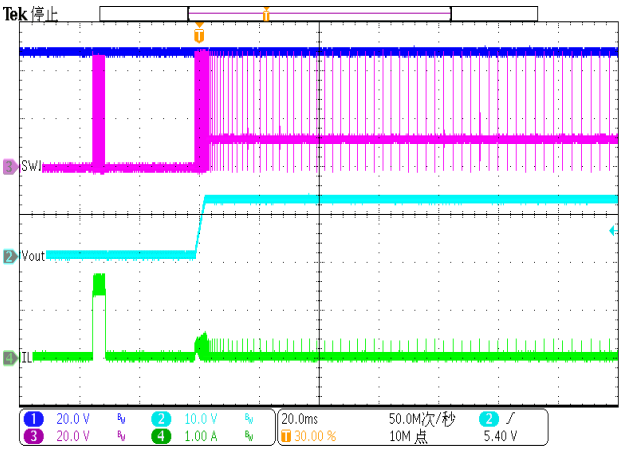

5XdaT &□ eTa2 daaT cAT TPbT

EX, E E dc; !E d Tbb cWTaf XbT cTS

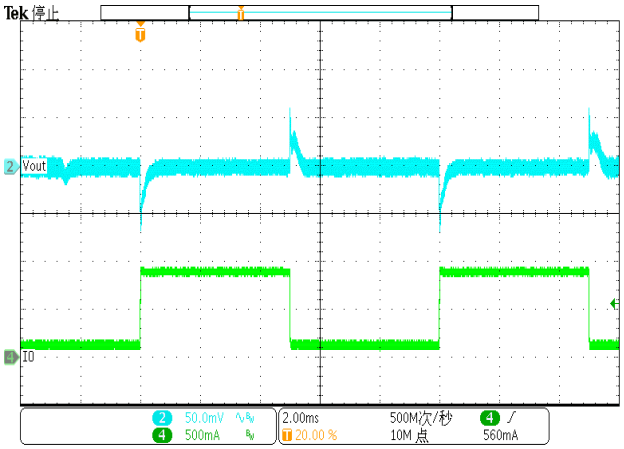

5XdaT □ PSCaP bXT c □0 □(0 □%0 db

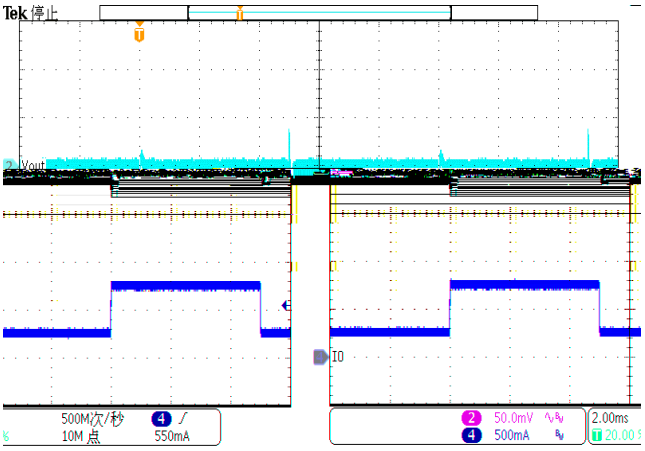

5XdaT (□ PSCaP bXT c □1 0 □& 0 □%0 db

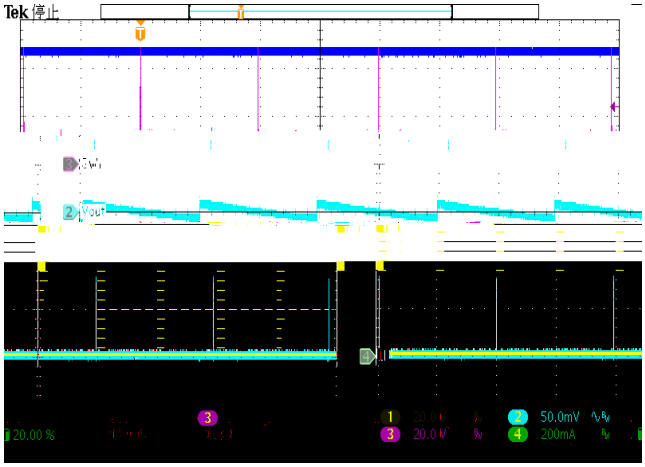

5XdaT! □ dc_dcAX__T 8 PS, 0

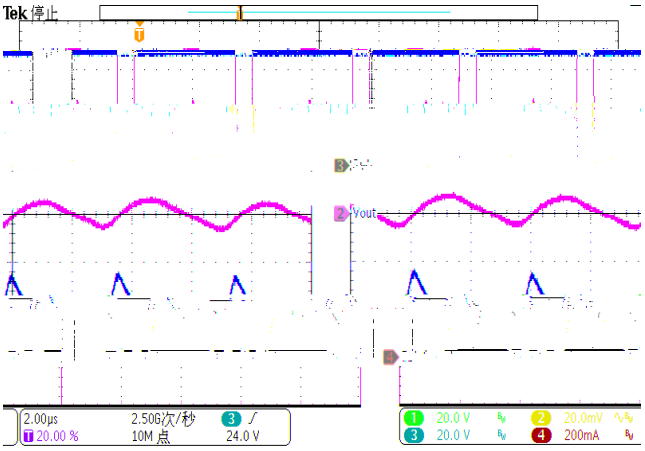

5XdaT! . dc_dcAX__T 8 PS, □0

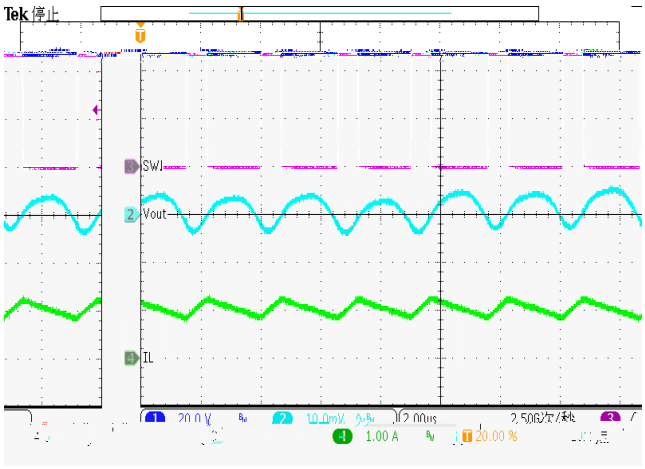

5XdaT!! □ dc_dcAX__T 8 PS, 0

5XdaT!"□CWTa P E8= !E dc 0

a _Ta 21 Ph dc Xb P RaXXRP U aB2C! 0 ! b bcPQT P S TUURXT c _TaPcX □CWT caPRTb R SdRcXV UPbcbf XRWXV Rdaa T db a e dPVTb PaT TPbh c XcTaPRc f XWbcaPh XSdRcP RT P S _PaPbXXR RP_PRXP RT c VT TaPcT XbT P S STVaPST _TaU a P RT□5 aQTccTaaTbd db U f cWTbT VdXST XTb Pb QT f)

1. f Ta Va d SXV bRWT T Xb eTah RaXXRP QTRPdbT U RPaahXV _ f Ta cWTa P P S VXRWQ d RXV XbT Pbb RXRcTS f XWR RZ UaT dT Rh□CWT cWd Q Uad T Xb c PZT Va d S caPRT f Tbc X _T ST RT P S _ f TaPaT SXbcaXQdcTS TeT h 21□BdUURXT ch _PRXV Va d S PaTP f X _cX XT cWTa P P S cRPdbXV eTaWTPcPaTP□

2. PRT P f 4B A RTaP XRRP_PRXc aPb R bT c E8= _X P S cWT Va d S Pb _ bbXQT c aTSdRT _PaPbXXR TUUTRc□

3. 5 a _TaPcX PcUd aPcTS PS cWT c _ bXST Va d S PaTP dbc _a eXST PST dPcT WTPc SXbbX_PcXV PaTP□< PZT bdaT c _bf XRWXV _ f XW_ f TaWPeT f TaX _T ST RT UVa d SXV□

4. CWT _ f Ta _PS bWd S QT R TRcTS c Q cc 21 Va d S _P Tb dbXV dcX_T eXPb SXaTRch d STacWT 82□ CWT RT cTacWTa P _PS bWd S P f Phb QT

5. dc_dc XSdRc abWd S QT _PRTS R bT c cWT BF _X□CWT PaTP UcWT 21 R SdRc a XX XTS c _aTeT c TgRTbbXeT RP_PRXXeT R d_XV□

6. A dcT 1BC RP_PRXc acaPRT cWT Q cc PhTac _a eXST f XST _PcWU ac _bXST Va d S□

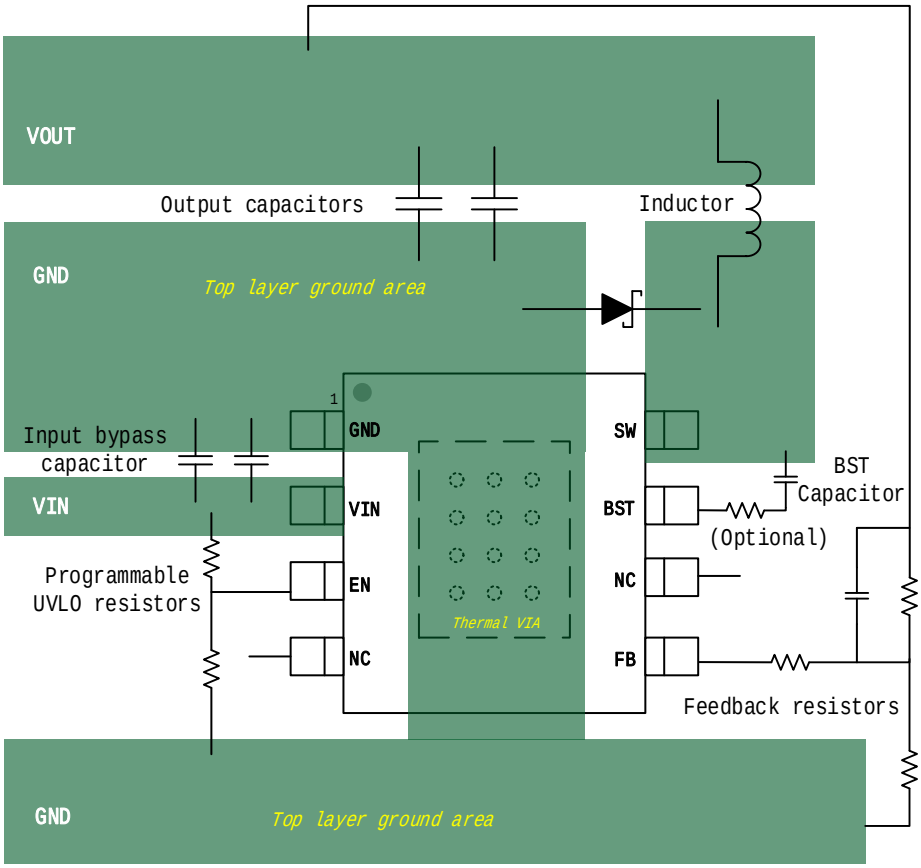

5XVdaT! □ 21 Ph dc4gP _T

I D BG HKF MBHG

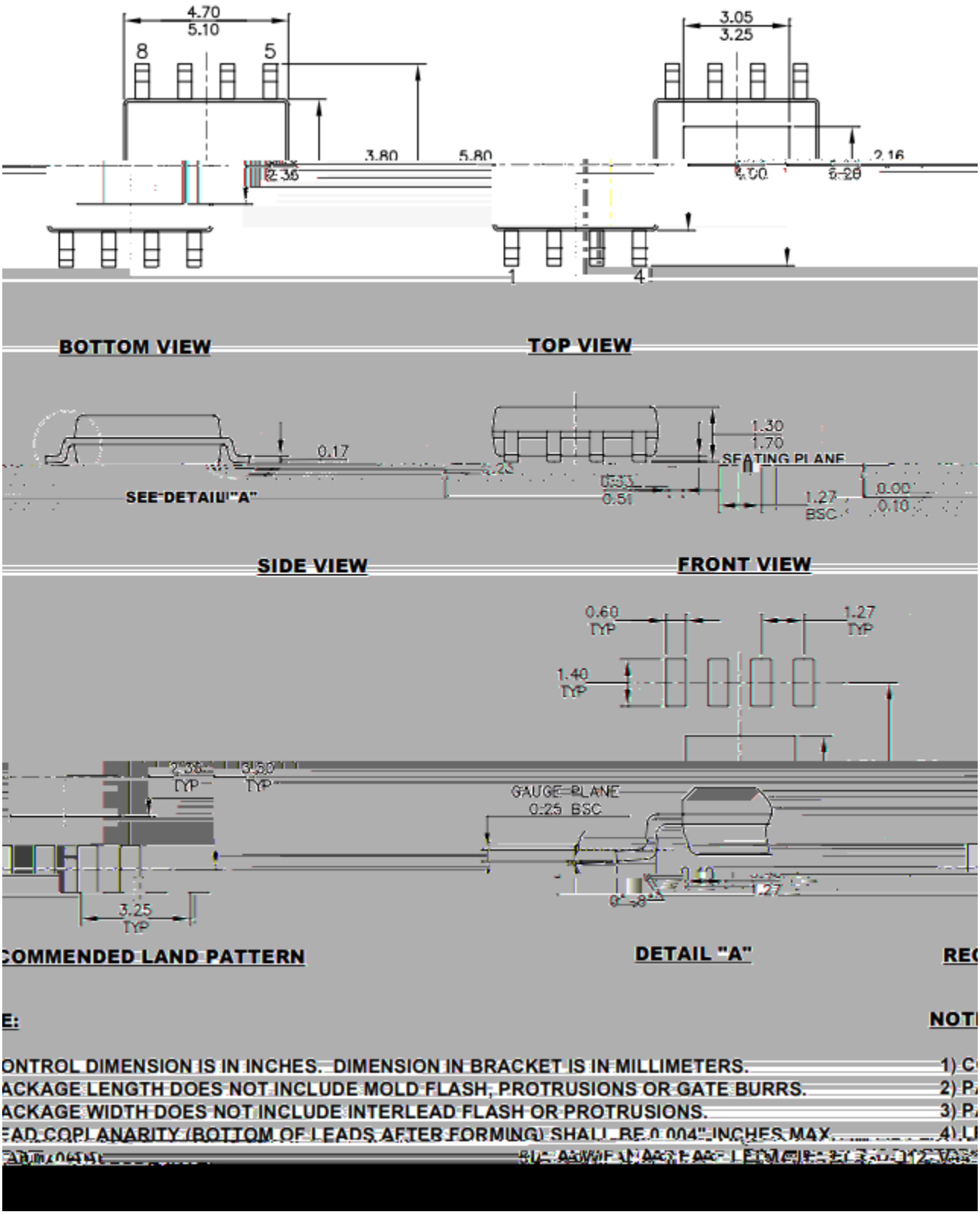

M I G K E BG HKF MBHG

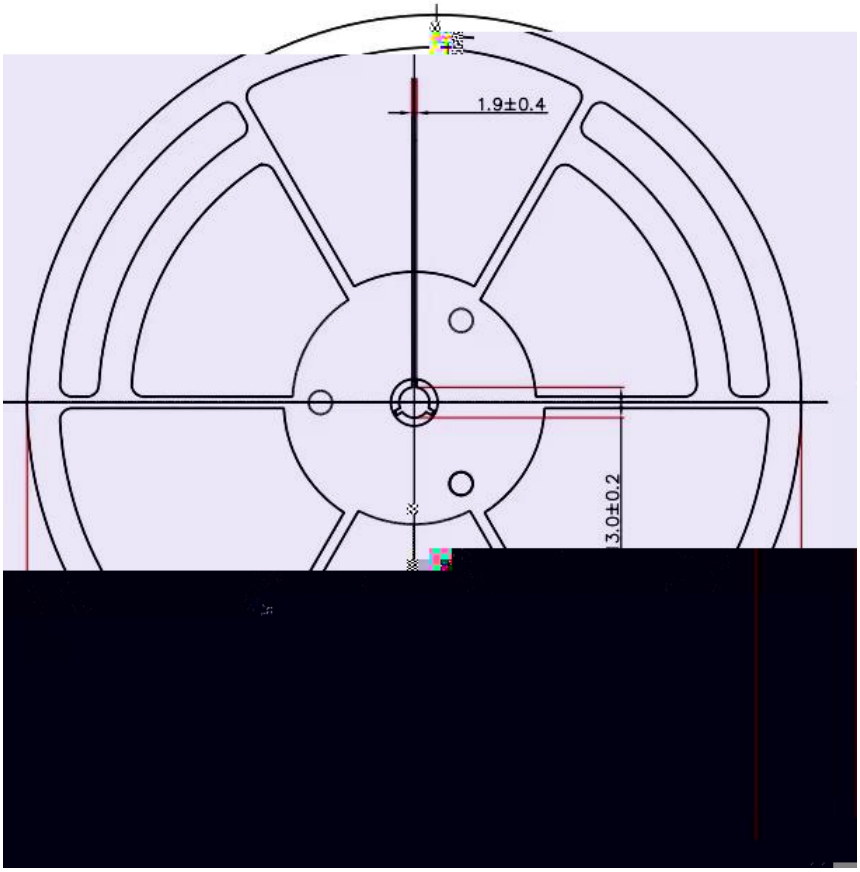

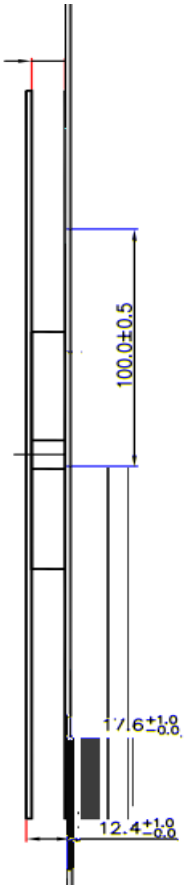

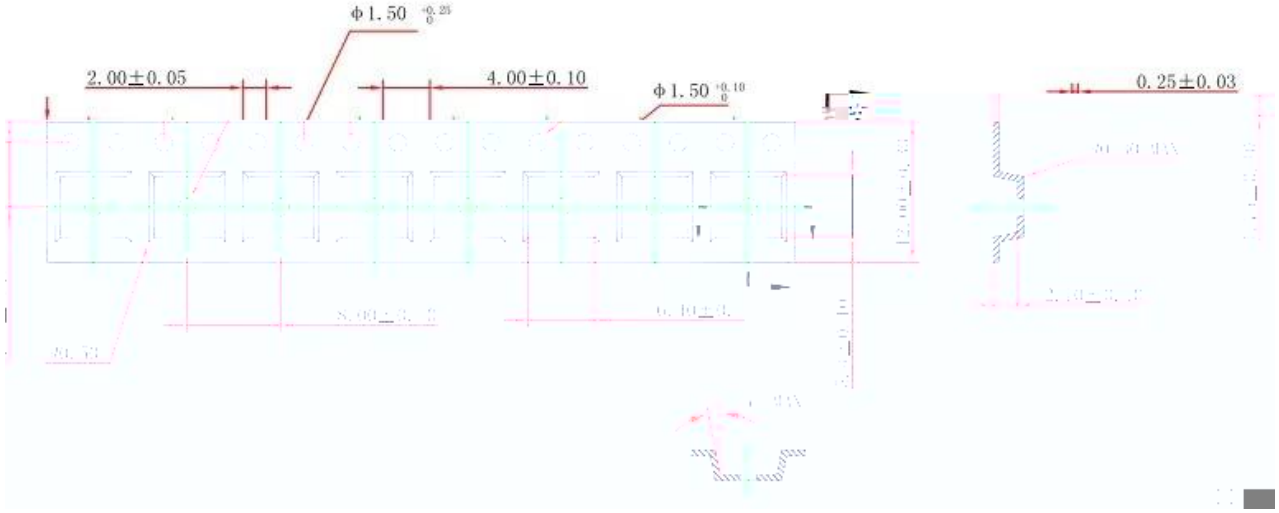

CWT XU a PcX X cWb S Rd T cb bdQ?TRcc RWP VT f XW dc cRT□DbTab bW d S f PaaP cP S VdPaP cTT cWT cWbS _Pach 8 cT TRcdP a _Tach aXWb PaT cXUaX VTS d_ f WT XcTVaPcX V B XR 2 cT cCTRW Vh B2C _a SdRcb Xc P h P__ XRPcX □B2C f X cPbbd T P h TVP aTb_ bXQXch U aP h bPXS P__ XRPcX b□