REVISION HISTORY

DEVICE ORDER INFORMATION

8 56 8 =7	57 5 =	5 85 8 57	57 5 5 =	=	57 5 8 7 = =
	, ,				

ABSOLUTE MAXIMUM RATINGS

8 7 = =	=	5	=
, ,			
, , , , ,			

(1)

(2)

PIN CONFIGURATION

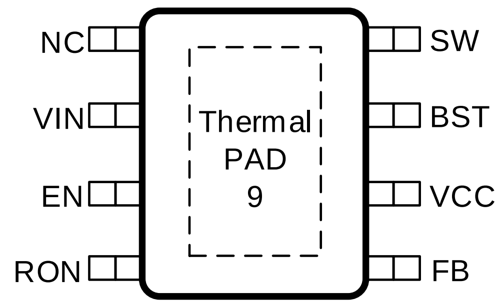

: %, ,

PIN FUNCTIONS

5		= : 7 =
		,
		, ,
		a) b) c)
		HO L F L N

RECOMMENDED OPERATING CONDITIONS

5 5	8 : = = =	=	5	=

ESD RATINGS

5 5	8 : = = =	=	5	=

(1)
(2)

THERMAL INFORMATION

5 5	5 ₹	,	=

(1)

ELECTRICAL CHARACTERISTICS

6	5 5	7 8= =	= 5	=

TYPICAL CHARACTERISTICS

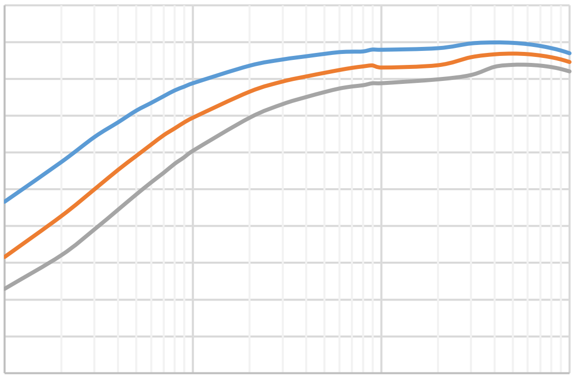

, , , , ,

, , , ,

,

, , , , , , , ,

, , , , ,

,

, , , , , , , , , , ,

FUNCTIONAL BLOCK DIAGRAM

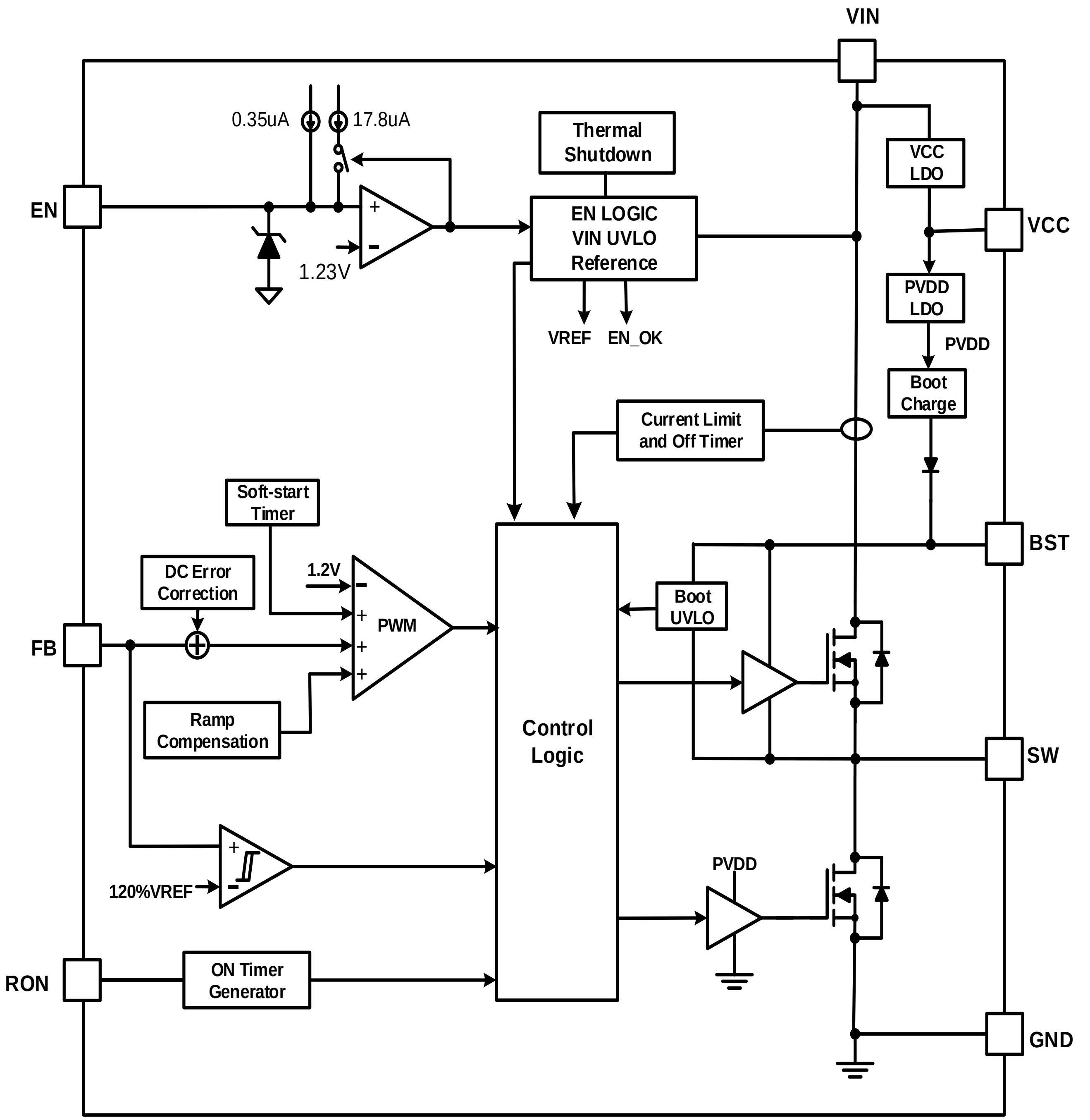

, , , ,

OPERATION

7 **7**

7

=

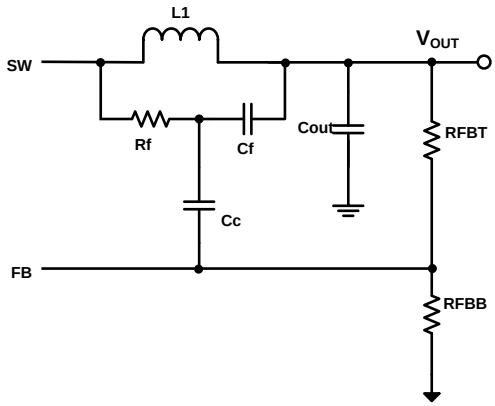

-
-
-

77

(1 ˆf 7 K »ÜY(B™–x<ØšíÀa'' ,F H

D V

APPLICATION INFORMATION

6 5 ,

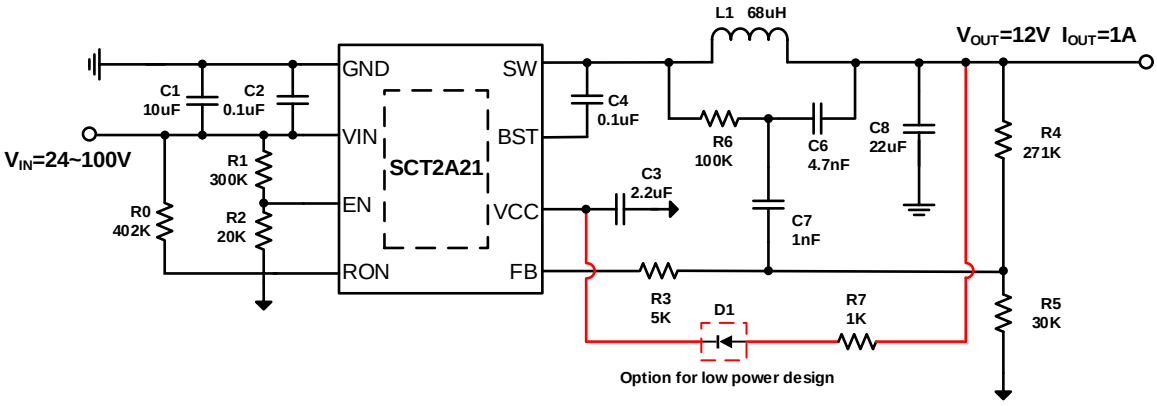

: %% 7 5 %8 %,

8

8	
,	, , , , ,
,	
, ,	
,	,
, , , , ,	
, , , , , , ,	, ,

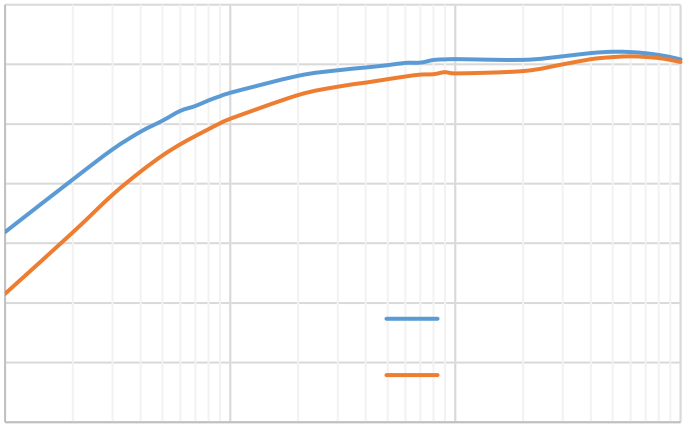

: % : 1 1% 8% 8%

Table 1. R_1, R_2Value for Common Output Voltage (Room Temperature)

	(	)
,	,	,
	,	,
	,	,

•

- , , , , ,
- , , , ,
- , , , ,
- , , , , ,
- , , , , , ,
- , , , , , ,

WR0BNFeDÀ

7 5 %

1

6 7

7

-
-
-
-
-
-

. 7 6 : 1

. 7 6 : 1

5

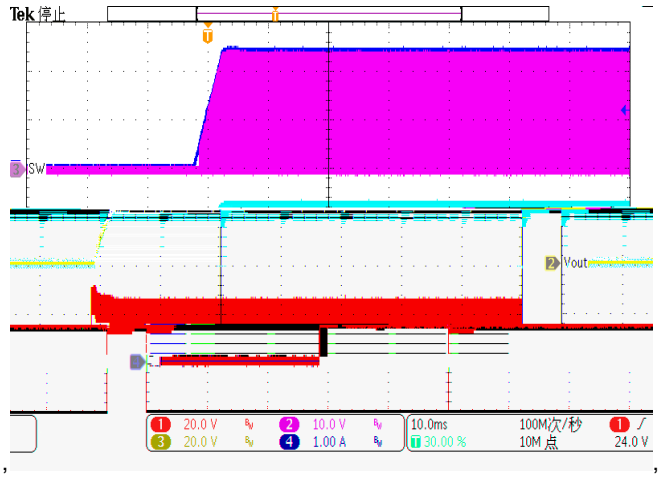
Tek 停止
SW
Vout
20.0 V
10.0 V
10.0ms
100M次/秒
20.0 V
1.00 A
30.00 %
10M 点
24.0 V

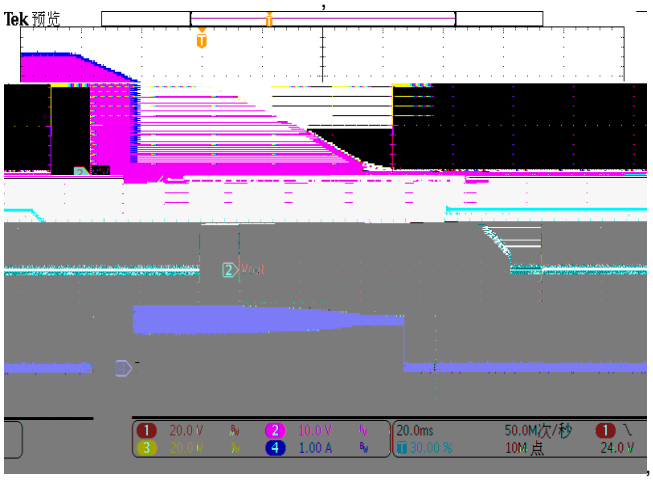
Tek 预览
Vout
20.0 V
10.0 V
20.0ms
50.0M次/秒
1.00 A
30.00 %
10M 点
24.0 V

5

, , , , ,

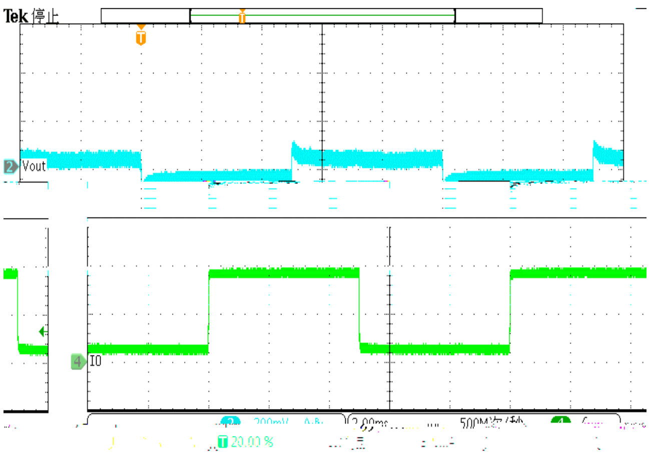
Tek 停止
Vout
IO
20.00 %

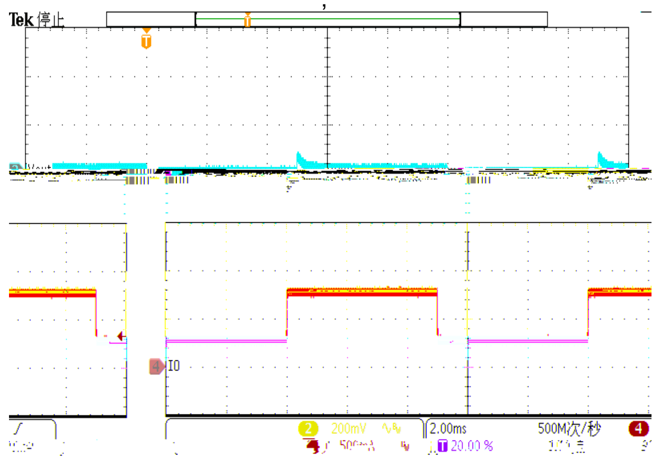
Tek 停止
IO
200mV
2.00ms
500M次/秒
20.00 %

, , , , , , , , , , , , , ,

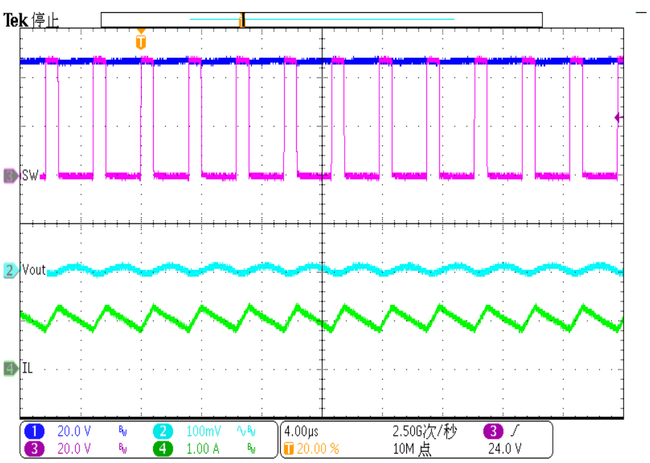
Tek 停止
SW
Vout
IL
20.0 V
100mV
4.00µs
2.50G次/秒
20.0 V
1.00 A
20.00 %
10M 点
24.0 V

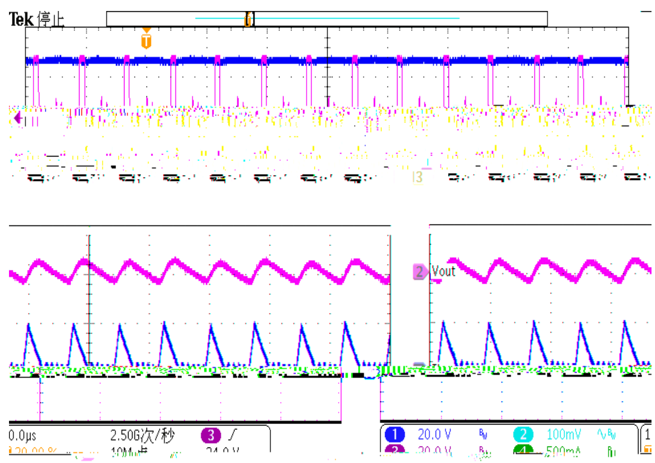
Tek 停止
Vout
0.0µs
2.50G次/秒
20.0 V
100mV

, , , , , , , ,

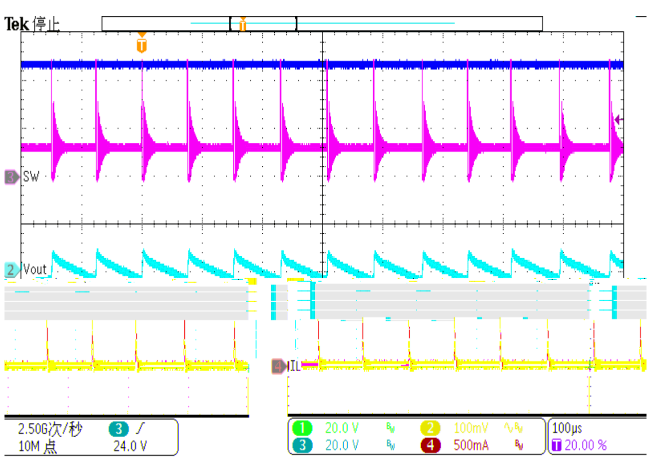
Tek 停止
SW
Vout
IL
2.50G次/秒
10M 点
24.0 V
20.0 V
100mV
100µs
20.0 V
500mA
20.00 %

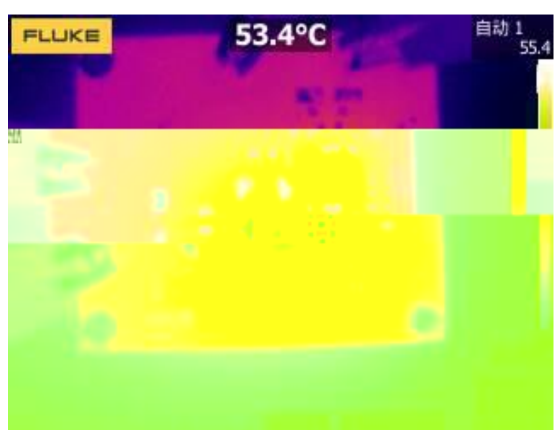
FLUKE
53.4°C
自动 1
55.4

, , , , , , , , ,

1.
2.
3.
4. L

H KO

PACKAGE INFORMATION

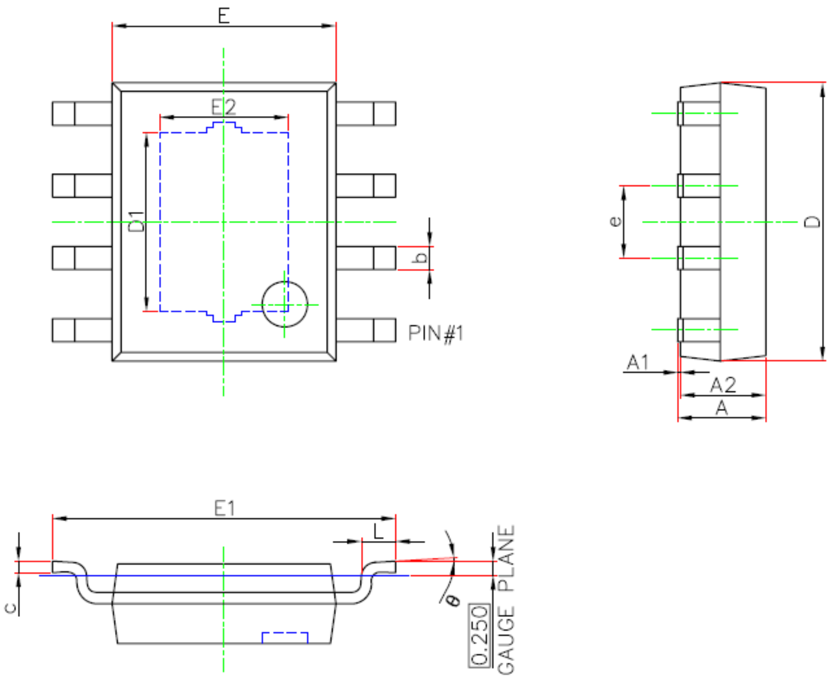

, , ,

	, ,		, ,	
			,	
θ				

.

1. , , , , , , , , , ,
2. , , ,
3. , , , , ,
4. , , , , , , ,
5. , , , , , , , , , , , , ,
6. , , , , , , , , , , , , , , ,
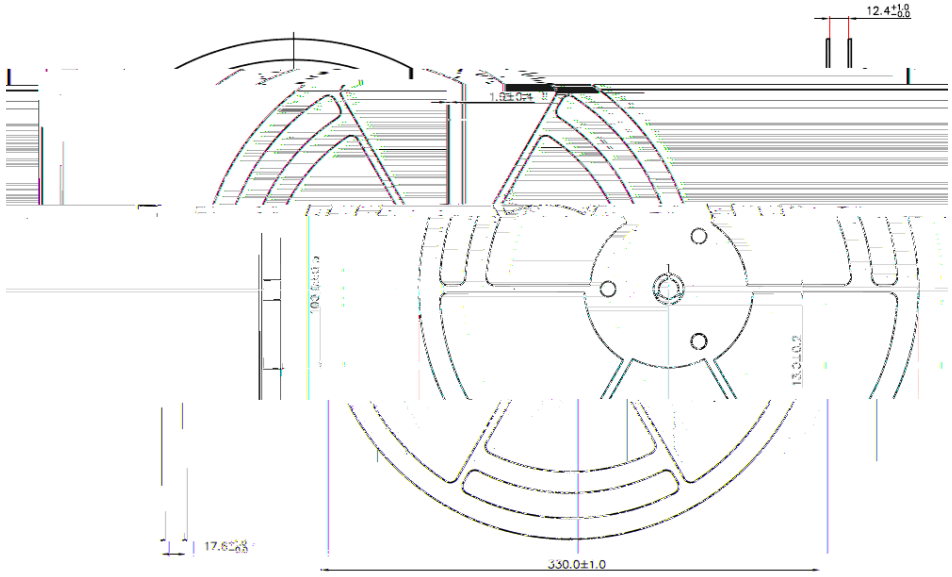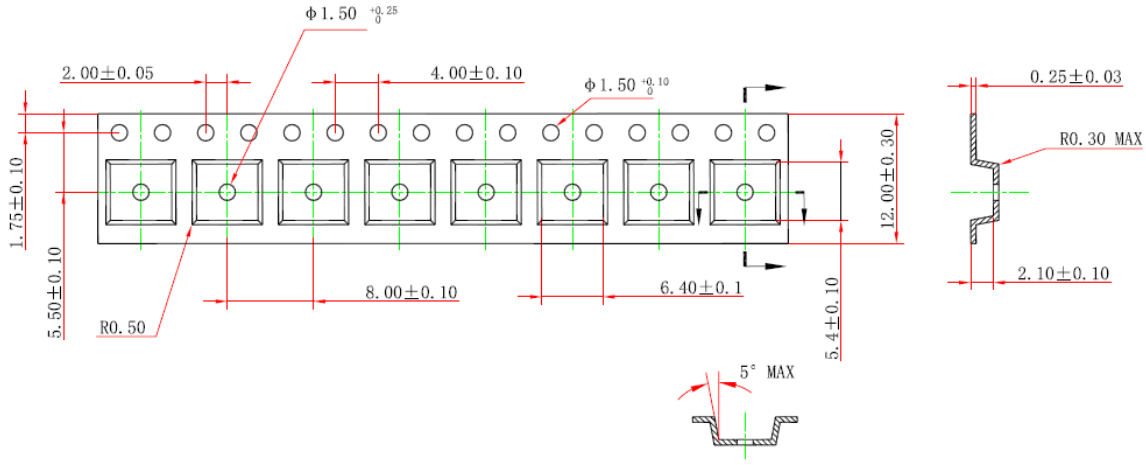
TAPE AND REEL INFORMATION