)RU PRUH LQ&RQWHQW 7HFKQRORJ&RQWHQW 7HFKQRORJ&RQWHQW 7HFKQRORJ

ELECTRICAL CHARACTERISTICS

9,1 9 7- ƒ&a ƒ& W\SLFDO YDOXH LV WHVWHG XQGHU ƒ&

9,1

TYPICAL CHARACTERISTICS

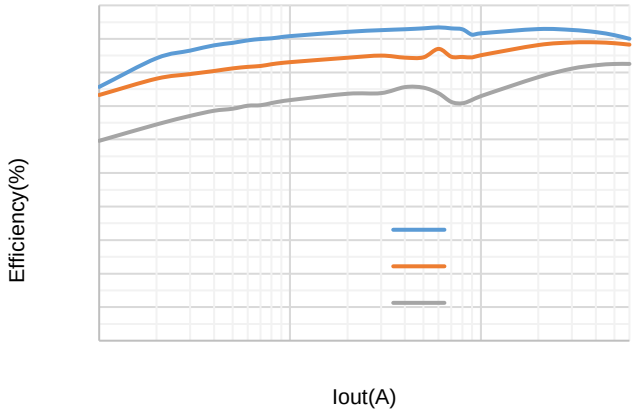

) L J X U H (H I I L F L H Q F \ Y V / R D G &9 X U U H (

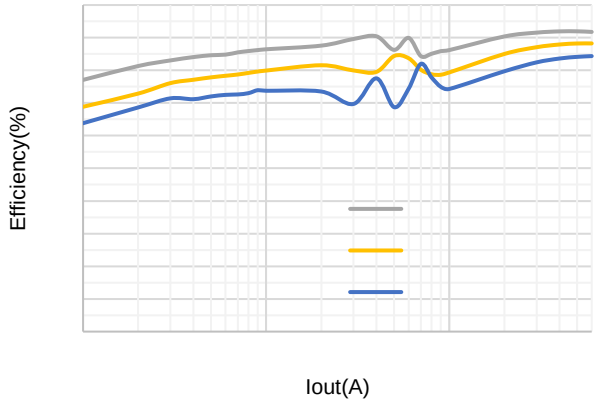

) L J X U H (I I L F L H Q F \ Y V / R D G &9 X U U H

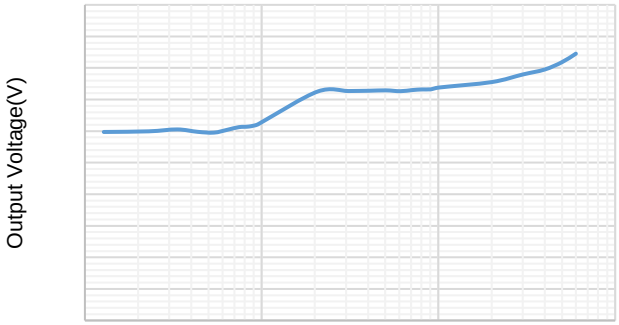

) L J X U H / R D 5 H J X O D W L R Q 9 R X W 9

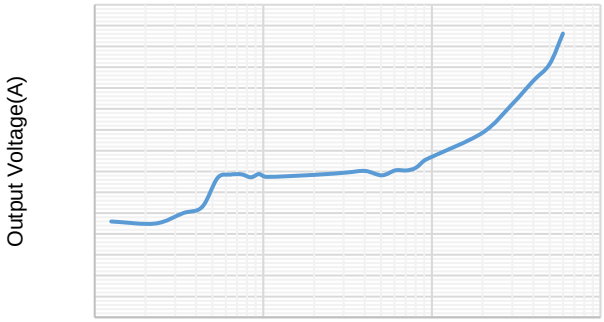

) L J X U H / R D G 5 H J X O D W L R Q 9 R X W 9

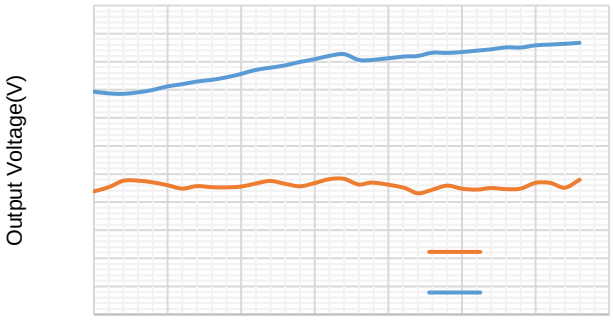

) L J X U H / L Q H 5 H J X O D W L R Q

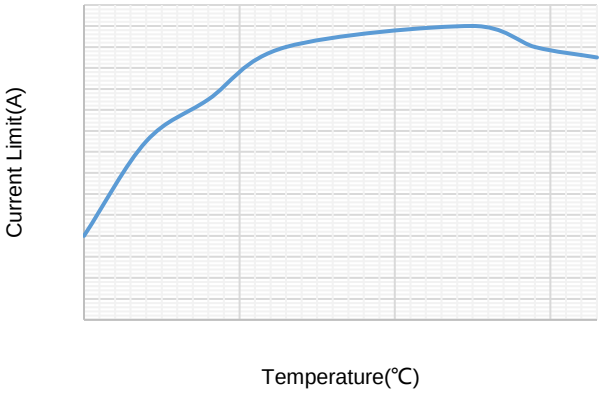

) L J X U H 6 &X U U H Q W / L P L W 9 6 7 H

FUNCTIONAL BLOCK DIAGRAM

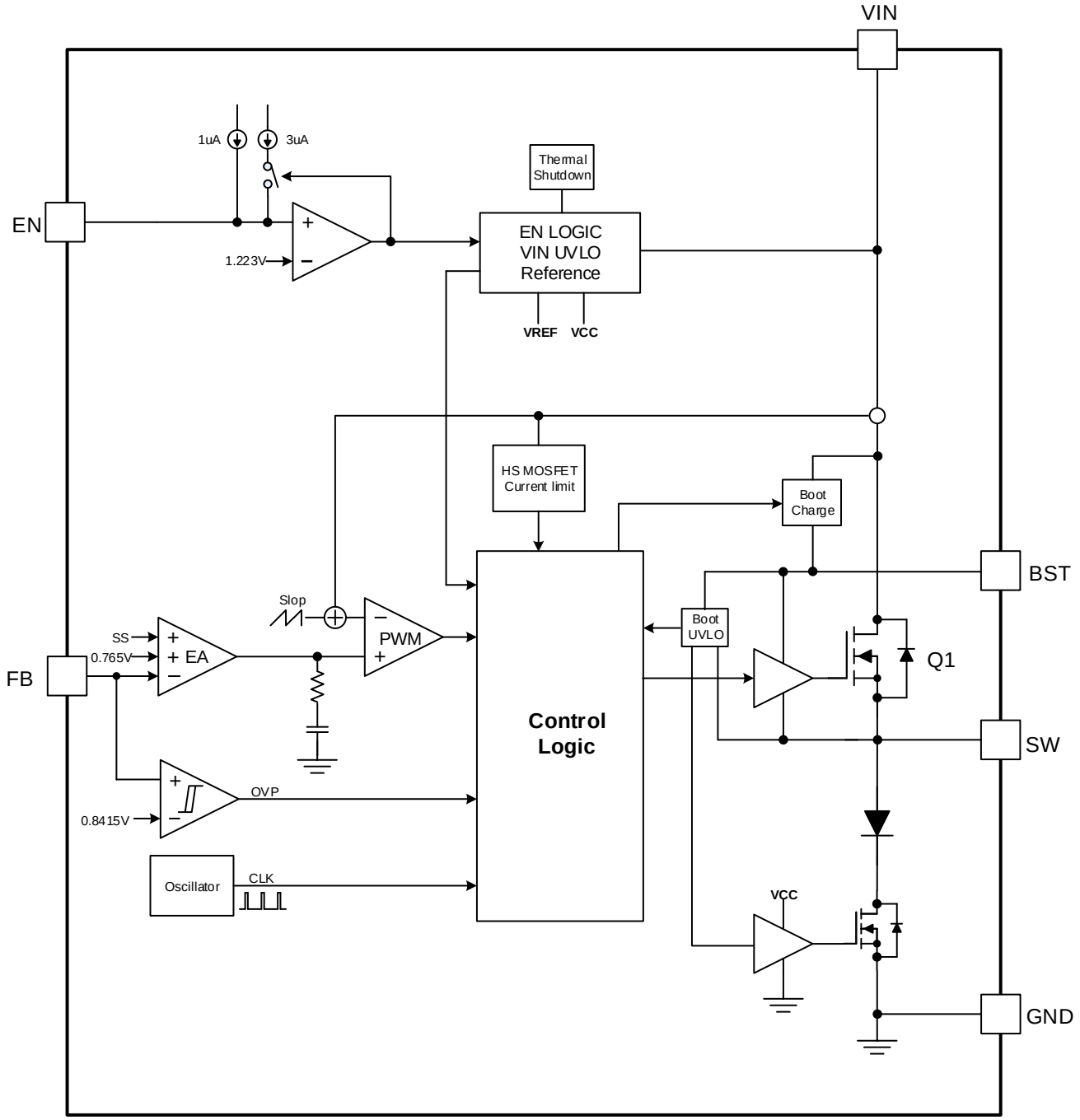

)LJXUH)XQFWLRQDO %ORFN 'LDJUDP

)RU PRUH LQ[illegible] &RQWHQW 6HF &RQ &RQWHQW 7HF &RQ &RQWHQW &RQ &RQWHQW &RQ &RQWHQW

OPERATION

7KH &7 4LV D 9 LQSXW $ RXWSXW EXFN FRQYHUWHU WKDW DOORZV WKH LSQRVH WU
026)(7 ,W LPSOHPHQWV FRQVWDQW IUHTXHQF\ SHDN FXUUHQW PRGH FR
H[FHOOHQW WUDQVLHQW UHVSRQVH

7KH &7 4IHDWXUHV IL[HG &RZLW &FKLQJ IUHTXHQF\ ZKLFK PLQLPL]HV WKH
FRPSRQHQWV VL]H &&&&

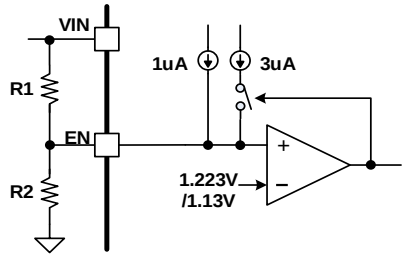

)LJXUH6\VWHP 89/2 E\ HQDEOH

ZKHUH

9UL LVLQJ WKUHVKRO

9IDOO LV IDOOLQJ WKUHVKRO

7KH6&7 4UHJXODWRUHWXUQHDOL UHIHUHQFH9 ZRXOWDJHRODHWURYQHFUH WKH RSHUD
WHPSHUDDQGXVRO WD7JKHUDXQWSXW YROWDJHGLY LVGHHWUHEWRPXWXL VQWRRGUH WR WKH
LVUHFRPPHQGHG WR XVH EHWWRWOHUWRUHDQ EWDRW LRQ FDOUFXOLDWWHDQFH RI UHVLVW
7RLPSURYH HIILFLHQF\ODDW JOHLJKYW OXDHDHHUVHFRPPRUHRZGHHYGHU LI WKH YDOXHV D
WKUHJXODWRU ZLOO EH PRUHDIVXFWWHQWLREXOWHSXWR QRO WHDJH DFFXUDF\

ZKHUH

5)%B72S LWKH UHVLVWRU FRQQHFWLQJ WKH RXWSXW WR WKH)% SLQ

5)%B%2W LV WKH UHVLVWRU FRQQHFWLQJ WKH)% SLQ WR WKH JURXQG

7KH6&7 4LQWHJUDQWLHRWWRUWQDDOUWFXKLDW UDPSV WKH UHIHUHQFH YRO9WDJH I
UHHUHQFH YRPOW,DJWH1HSQLQV SXEOHOHGZ9 VZLWFKLQJ VWRSV DQG DWUKH ULHQWHWUQ
7KH VWRWWDUW DGGXRUUWRHXWWGRZHQWWKRHURPYDHOUORDGLQJ

$Q H[WHERQDWOFWDSDSLWRU EHWZHHQ %227 SLQ1HDRQGG6L:QSLJQDWHUHXHGWYSRZHU
026)(7 7KEHRRWVFWDSDSLWRU YROWDJH LV FKDUJHG IURP DQ LQWHUQDOH
026)(7 LRMI DWQKGH H[WHUQGDO GLRZG H7KRHQGHXFRMPPHQGHG YDOXH RI WKH %227 P

7KH89/2 RI KVLJGH 026)(7 JDWH GULYHU KRDV 9LDVQ QJ\WWKWUHHUVRSOKGHRI WKH
GHYLFH RSZHLWKOWJ4VGXW\ FH\[FWOUHHRHUO\ OEERRW VOWUDDGS PHDDSEHFLQRW UHFKDUJH
FRQVLGHUDEOH ORQJ WHRRHW VFWKSHDYSRVWRQDLHWDRVQGWL YHGKHJK26)(7 IX:KH\QRQ
WKH YROWDEJHRDWFWUDRSVDVSGLWRRSJV EH9O%RZ227 89/2 RF7KXHUR QYHURWHWXLQQQ QD
LQWHJUDWHGH 026)(7UL RGWLRDUHOWUKHYRWRDJEHR RWVWUDVSRXDSDQWWHURQYHUWH
RSHUDWLRQ RYHU D ZLGH GXW\ UDQJH

'XULQJ WKH FRQGLWLRQRORWDJHWGUDIHUHQFH IUR6R&7WKH4LQSHUXDWWRZW'KHRSRXW
2XW2 PRGHLJKLGH 026)(7 WWXDUQQQW ORQ DV WKHR%62:2SLQ YRDJHJUHWKDQ
%227 89/2 WKUHVKRHOHGQ WKHIYURPW%2J2H7 WR 6: GURSWWEHWZHHQ026)(QVWXU
RII DQGVLGHZ 026W(XURQV WR UHFKDUJH ERRWWWUWGLSDWWHRFRWWRWZDQW FKLQJ
F\FOHRVZVLGH 026)(7 RQO\ WXQQQ RQ FHRW HIUPLQ\E]HHWWRH RXWSXRW YROWD
VLGH 026)(7 RQR\QWXRU VHYWWOWRHWERPWRYOWWDJH LV FKDUJHG 9WRKHJWKHGHU WKD
026)(7ZRUNQQUP7KHH\IHFWXWH F\FOHRQIYWWHU GXULQHD/Q2 ERHSHUSWRRQ

'XULQJ VORZLQJ SRZHU XS DQG SRZHU GRZQ DSSOLFDWLRQ WKH RXWSXW
GRZQ WKDQNV WR /'2 RSHUDWLRQ PRGH $V WKH LQSXW YROWDJH LV UHG

SRZHUS DQG SGRZQUDSSOLFDWLRQ RWKHUR KLJK VLGH 026)(7 VWDUWV WR DS
:LWKRXW /'2 RSHUDWLRQ PRGH EH\RQG WKLV SRLQW WKH VZLWFKLQJ PD\
RXW RI UHJXODWLRQ 7RREWDLQ &&&&

W K H F W X L R Q W H H S F H U D W X U H W K H W U Q H D O P D O V W R S R Z H U 0 2 6 (Z L W F K L Q W K H
M X Q F W L R Q W H V E H O R Z X W H G H Y L F H U Z H L W K D L Q W H U S R O D W W R I W V W D U W

)RU PRUH LQIRUPDWLRQ RQ WHQW6EOHFRQ &RQWHQW 7HFKQRORJLHV&R
3URGXFW)RO&7U /LQNV

APPLICATION INFORMATION

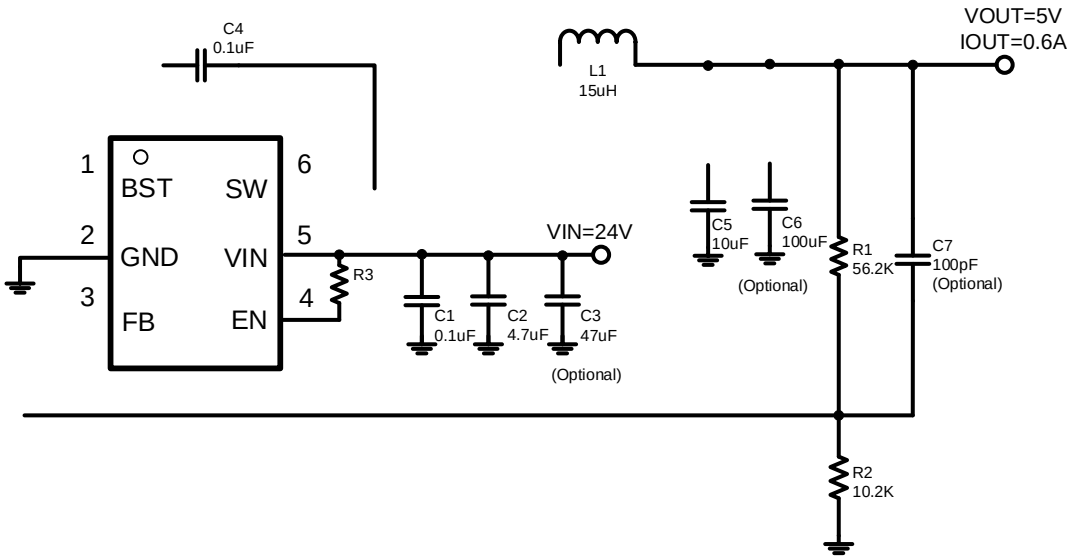

)LJXUH6&7 4'HVLJQ ([DPSOH&LUXLW &RQILJXUH &RQWUROOHU &RQWHQW &RQWHQW &RQWHQW

7KH RXWSXW YROWDJH LV VHW E
5 DQG 5LQ W\SLFDO DSSOLF
5HFRPPHQGHG VLVWDQFH8VLQH TXDV
WR FDOFXODWH 5

ZKHUH

9 LV WKH IHHGEDFN UHIHU
9

Table 1. R_5, R_6 Value for Common Output Voltage

)RU PRUH LQ &RQWHQW 7HFKQRORJ &RQWHQW 6HUL &RQWHQW &RQWHQW &RQWHQW

:KHUH

/0,1 LV WKH LQGXFWDQFH
/VZ LV WKH WFKLQJ IUHTXHQF\
9287 LV WKH SXW YROWDJH
9,1PD[LV WKH PDOPXP LQSXW YROWDJH
,287PD[LV WKH PD[LPXP '& ORDG FXUUHQW
/,5 LV FRHIILFLHQW RI ,

7KH WRWDO FXUUHQW IORZLQJ WKURXJK WKH LQGXFWRU LV WKH HOHPHQW
DQ LQGXFWRU FKRRVH LWV UDWHG FXUUHQW HVSHFLDOOH DFFXUDWH
506 FXUUHQW DOVR QRW EH HIIHFWHG EH VZLWFKLQJ FXUUHQW RQ LQGX
FDOFXODWHG DV LQGHHQGHQW RQ

:KHUH

,3($. LV WKH LQGXFWRU SHDN FXUUHQW
,287 LV WKH '& ORDG FXUUHQW
,33 LV WKH LQGXFWRU SHDN SRZHU FXUUHQW
,506 LV WKH LQGXFWRU FXUUHQW

,Q RYHUORRDGORQJ WUDQVLHQWLEORQGLWRQ SDN FXUUHQW FDQ LQFUHDVH
WKH GHYLFH ZKLFK PDVWHUV WKH SRZHU DQDOSHUYRDWLRQ FKRVH DQ LQGXFWRU ZLWK
UDWLQJ HUWKHDQ %HFDXVH WKH [LPXP(&,OLPLEWHG GHYLFH WKH PD[LPXP RXWSXW
6&7 4FDQ GHDOLYHU SHQGV RQ WKH LQGX7KXUPDOH[HPXHQW HUVLSSHG RXWSXW F
DIIHVWWKH VHOHFWLRQ RI DQ RHHW OOHU LQGXFWRUL QGXFXUUHQW OLPLWHRZ HDGLO
PD[LPXP RXWSXW FXUUHQW

7KH6&7 4UHTXLUHV DQ H[WHUQDO FDWFK GLRGH EHWZHHQ WKH 6: SLQ D
UHYHUVH YROWDJH UDWLQJ HTXDO WR RU JUHDWHU WKDQ 9,1 PD[7KH S
WKH PD[LPXP LQGXFWRU FXUUHQW\ 6&7 FRQWDLQ\ JRRRGGHKRLFH IRU WKH FDW
IRUZDUG YROWDJH 7KH ORZHU WKH IRUZDUG YROWDJH RI WKH GLRGH WK

7\SLFDOO\ GLRGHV ZLWK KLJKHU YROWDJH DQG FXUUHQW UDWLQJV KDYH
9 UHYHUVH YROWDJH LV SUHIHUUHG WR DOORZ LQSXW6&7 ROW4DJH WUDQV

)RU WKH H[DPSOH GHVLJQ FKRRVH%N\ GLRGH LV VHOHFWHG IRU LWV ORZHU
FKDUDFWHULVWLFV FRPSDUHG WR VPDOOHU GH%YLFHV 7KH WRSGWDOWRUZ

7KH GLRGH PXVW DOVR EH VHOHFWHG ZLWK DQ DSSURSULDWH SRZHU UD
WKHWRUPH RI WKH LQWHUQDO SRZHU DIVZLKWFKQ WKHXQRDOWVRQWFK WKH PD[LP
YROWDJH WKH RXWSXW YROWDJH DQG WKH VZLWFKLQJ IUHTXHQFLHV 7KH
IRUZDUG YROWDJH RI WKH GLRGH WR FDOFXODWH WKH LQVWDQWDQHRXV
IUHTXHQFLHV WKH DF ORVVHV RILQWHRGDLFRGHKQWHGWRDEHDVWHQRI WKH
FKDUJLQJ DQG GLVFKDUJLQJ RI WKH MXQFWLRQ FDSDFLWDQFH DQG UHYHUV
WKH WRWDO SRZHU GLVVLSDWLRQ LQFOXGLQJ FRQGXFWLRQ ORVVHV DQG

7KH %$) GLRGH KDVRD [illegible] (TXDWKLRQWRWDO ORWWKHQ WK
PD[LPXP LQSXW YROWDJH LV

,I WKH SRZHU VXSSO\ VSHQGV D VLJQLILFDQW DPRXQW RI WLPH DW OLJK
GLRGH ZKLFK KDV D ORZ OHDNDJH FXUUHQW DQG VOLJKWO\ KLJKHU IRUZD

7KH LQSXW FXUUHQW &RQYHUWHU LV GLVFRQQHFWHG &RQYHUWHU W
$& FXUUHQW &RQYHUWHU ZKLOH PDLQWDLQLQJ WKH &RQYHUWHU (65
IRU &RPSHQVDWRU &DSDFLWRUV ZLWK D &RXXX

FDSDFLWRUV DUH DQ LP FD)RDFLWRUPLF FDSDFLWRUV WKH FDSDFLWDQFH GRP
VLPSOLILFDWLRQ WKH RXWSXW YROWDJH GHSHOOHG FDQ EH HVWLPDWHG E\

:KHUH

- û LV WKH RXWSXW YROWDJH ULSSOH
- 6: LV WKH ZLWFKLQJ IUHTXHQF\
- / LV WKH LQGXFWDQFH RI LQGXFWRU
- &287 LV WKH RXWSXW FDSDFLWDQFH
- 9287 LV WKH RXWSXW YROWDJH
- 9,1 LV WKH LQSXW YROWDJH

'XH WR SDFLWRUV¶ XQGHU '& EL DV YROWDJH LV VLJQLILFDQWO\ UHGXFH FDSDF
FDSDFLWRUV FRQWRI WKHLUUDWHG YROWDJH DW7KHUHIRUH OHDYH PDUJL
HQVXUH DGHTXDWH HIIHFWLYH RQHD SDFLWDQFH RXWSXW FDSDFLWRUV ZRUN

)RU PRUH LQ &RQWHQW 7HFKQRORJ &RQWHQW &RQWHQW &RQWHQW

9LQ 9 9RXWXQ9OHVV RWKHUZLVH QRWHG

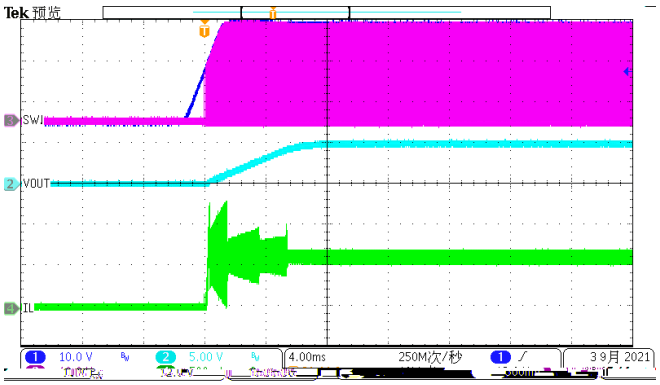

)LJXUH 3RZHU XS ,&RORG

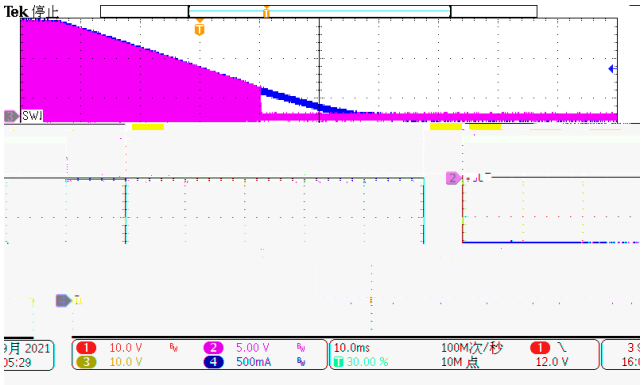

)LJXUH 3RZHU GRZQ &RORG

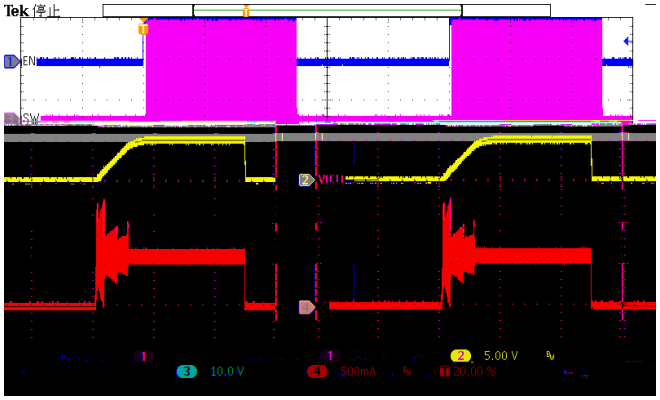

)LJXUH(1 WRJJOH &RORG

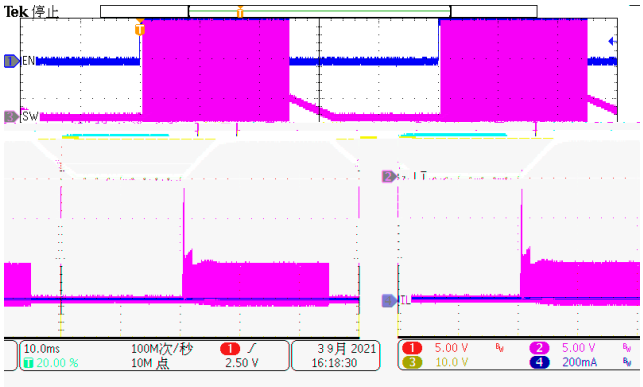

)LJXUH(1 WRJJOH &RORG

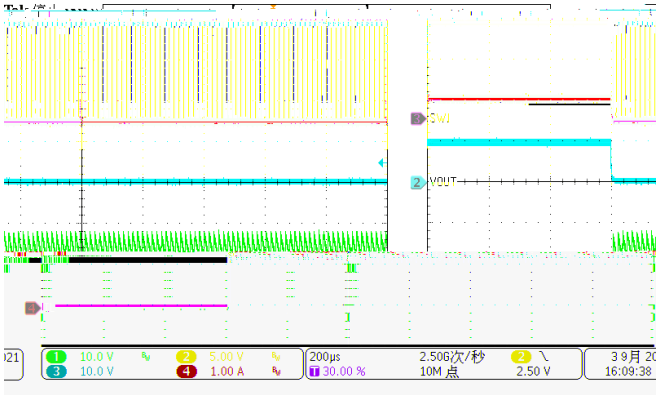

)LJXUH 2YHU &XUUHQW &&&&

)RU PRUH LQ&RQWHQW &RQWHQW &RQWHQW &

7KH UHJXODWRU FRXOG VXIIHU IURP LQVWDELOLW\ DQG QRLVH SUREOHPV
IUHTXHQF\ QRLVH LQGXFHV (0, VRIUSHUSRSHUOD DVZRXWF KRLQWSKDWLKJK HVVHQV

1. 0LQLPL]H WKH OHQJWK DQG DUHD RI DOO WUDFHV FRQQHFWHG WR WKH VZLWFKLQJ UHJXODWRU WR PLQLPL]H FRXSOLQJ
2. 7KH LQSXW FDSDFLWRU QHHGV WR EH YHU\ FORVH WR WKH 9,1 SLQ DQG D ORZ (65 FHUDPLF FDSDFLWRU &RQQHFW WKH FRXQG 9,1 SRVVLEOH WR UHGXF
3. 2XWSXW LQGXFWRU VKRXOG EH SODFHG FORVH WR WKH &&% SLQ 7KH DUHD RI WKH &&% FRQ H[FHVVLYH FDSDFLWLYH FRXSOLQJ
4. 89/2 DGMXVW DQG 57 UHVLVWRUV ORRS FRPSHQVDWLRQ DQG OHW JEQF JURXQG ZKLFK PXVW &&% SLQ &&% &&% &&%

7KH PD[LPXP ,& MXQFWLRQ WHPSHUDWXUH VKRXOG EH UHVWULFWHG WR WKH PD[LPXP DOORZDEOH MXQFWLRQ WHPSHUDWXUH VSHFLILHG LQ WKH SDFWXDO SRZHU GLVVLSDWLRQ O PD[LPXP SRZHU GLVVLSDWLRQ OLPLW LV GHWHUPLQHG XVLQJ (TXDWLRQ

(14)

ZKHUH

$ LV WKH PD[LPXP DPELHQW WHPSHUDWXUH IRU WKH DSSOLFDWLRQ

- LV WKH MXQFWLRQ WKHUPDO UHVLVWDQFH JLYHQ LQ WKH 7KHUPD

7KH UHDO MXQFWLRQ WHPSHUDWXUH RU WKHUPDO UHVLVWDQFH JUHDWO\ GHSHQGV RQ WKHUPDO SDG FRQQHFWLRQ DQG HQYLURQPHQWDO IDFWRU 8VLQJ WKLFN SODWH HQKDQFH WKH WKHUPDO SHUIRUPDQFH 8VLQJ WKH SHOOHW DQG EH OD\HU DURXQG WKH ,& ZLWKRXW VROGHU PDVN DOVR HQKDQFH WKH WKHU

)RU PRUH LQIRUPDWLRQ &RQWHQW &RQWHQW &RQWHQW

PACKAGE INFORMATION

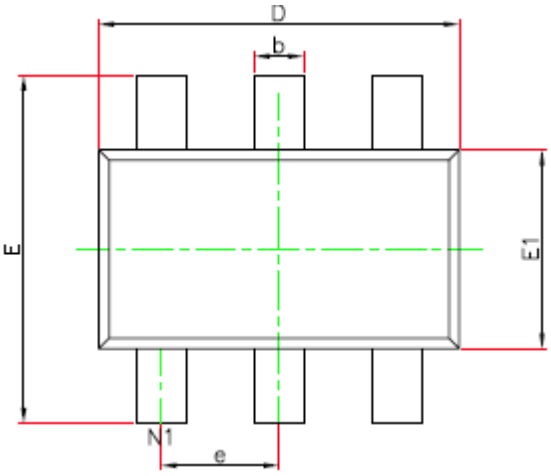

723 9,(:

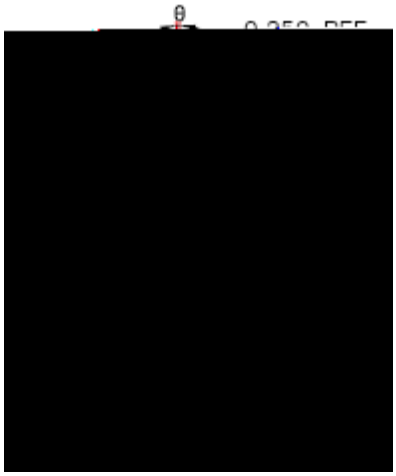

%27720 9,(:

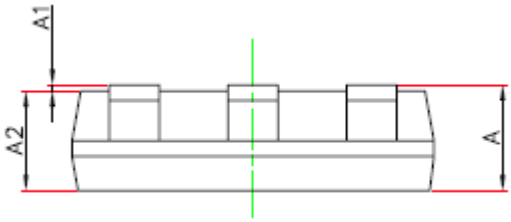

6,'(9,(:

$			
$			
$			
'			
(			
(			
E			
F			
H		%6&	
/HUV			
G	°		°

1. 'UDZLQJ SURSRVHG WR EH PDGH D -('(& SDFNDJH RXWOLQH 02 YDULDWLRQ
2. 'UDZLQJ QRW WR VFDOH
3. $OO OLQHDU GLPHQVLRQV DUH LQ PLOOLPHWHUV
4. 7KHUPDO SDG VKRXOG EH VROGHUHG WR WKH ERDUG
5. 'LPHQVLRQV RI H[SRVHG SDG RQ ERWWRP RI SDFNDJH GR QRW LQFOXGH PROG IODVK
6. &RQWDFW 3&% ERDUG IDEULFDWLRQ IRU PLQLPXP VROGHU PDVN ZHE WROHUDQFHV EHWZHHQ WKH SLQV

)RU PRUH LQIRUPDWLRQ &RQWDFW 7HOHSKRQH &&&&

TAPE AND REEL INFORMATION

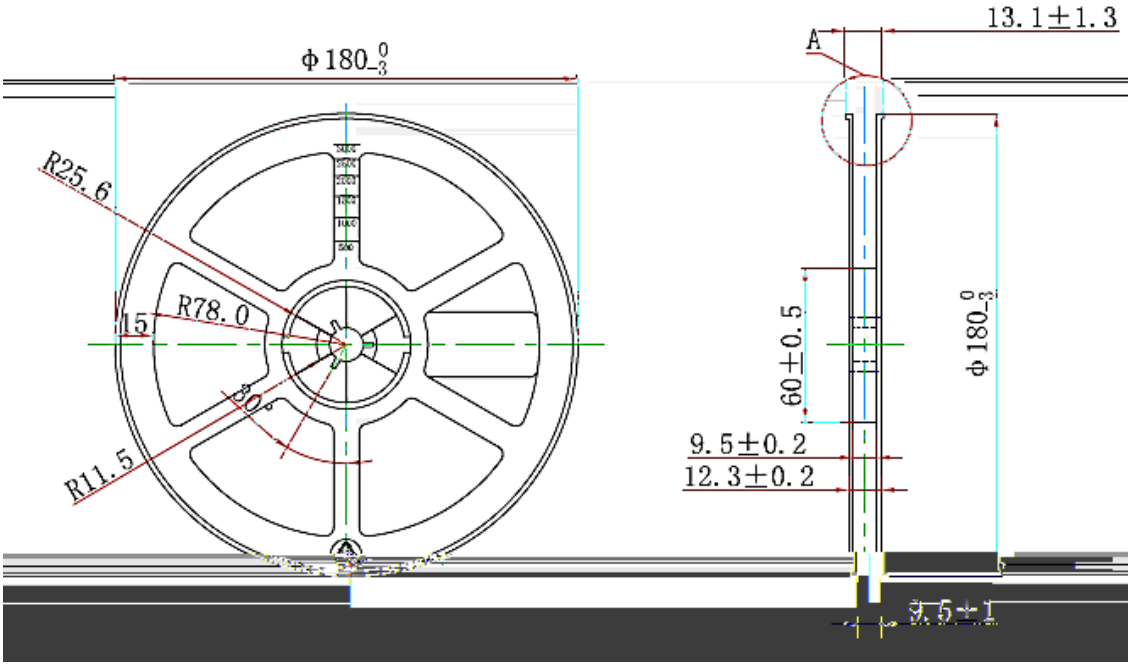

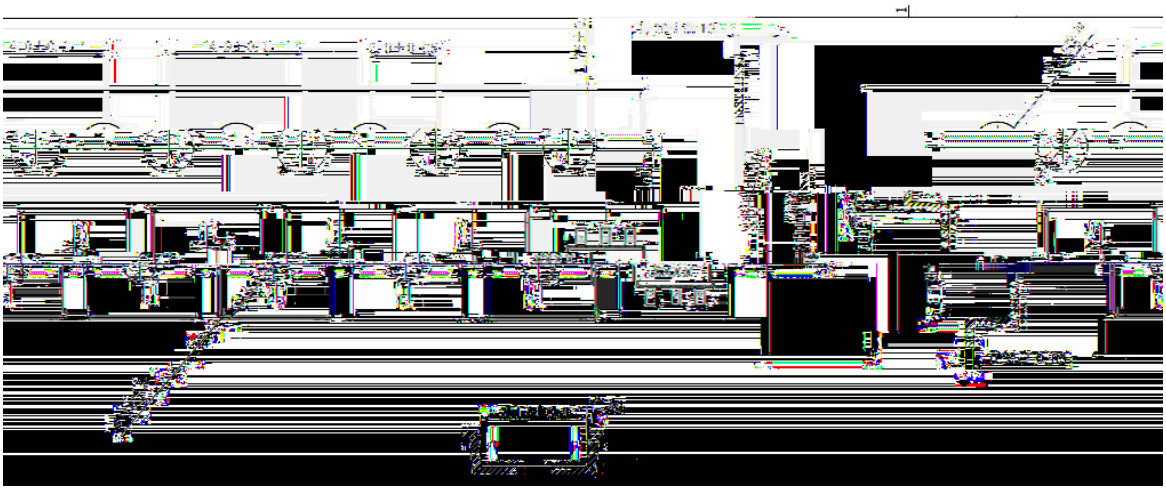

)RU PRUH LQ&RQWHQW &RQWHQW &RQWHQW &